YRC-5X Dental-Grade Milling Machine

Product Manual

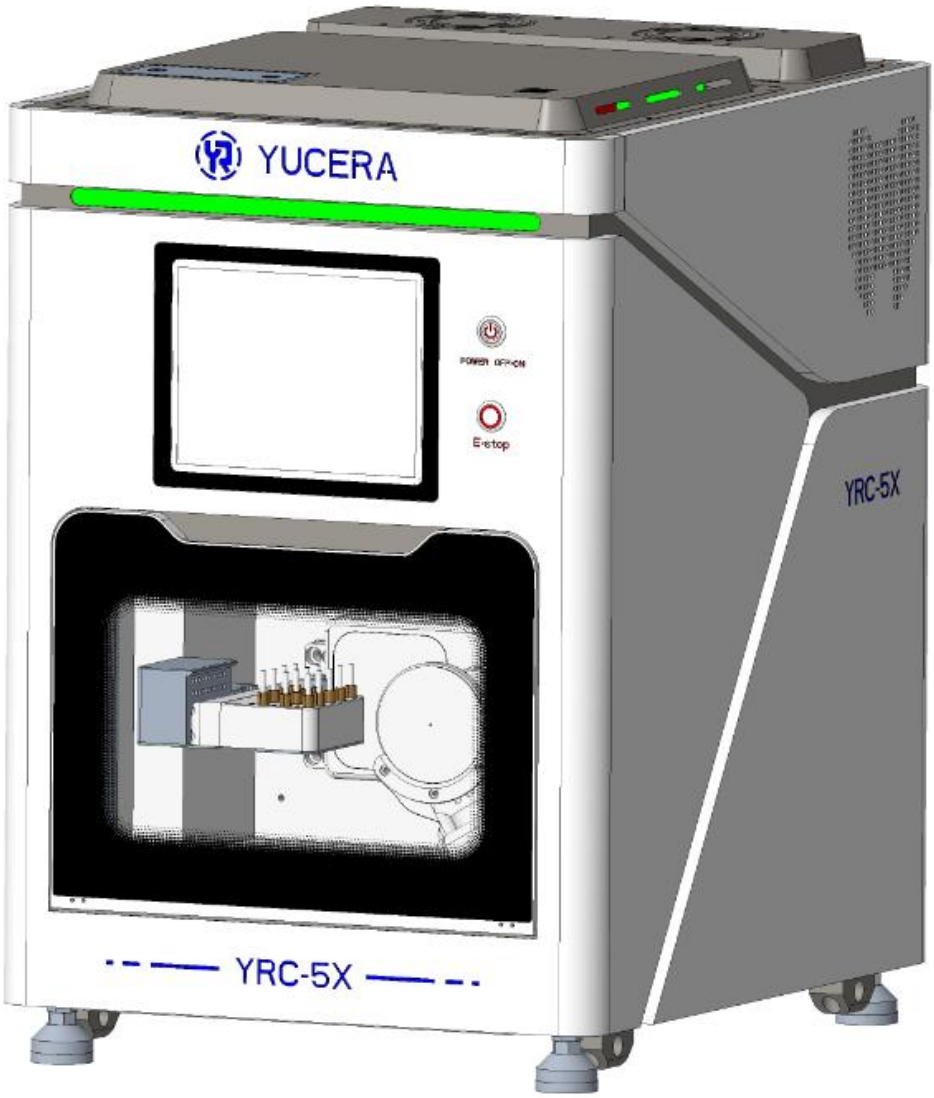

catalogue

Preface I
Charpter 1 Basic understanding of equipment 1
1.1 Device Overview 1
1.2 Back panel of the device 2
1.3 Host operation page 2
1.4 Work chamber door 3
1.5 Work cabin 4
1.6 Coolant passage 4
1.7 Technical parameter 6
Charpter 2 Equipment transportation and installation 7
2.1 Handling, packing and storage 7
2.1.1 Safety Guidelines for Transportation 7
2.1.2 Packaging 7
2.1.3 Markings on Outer Packaging. 8
2.2 Accessories 8
2.3 Installation conditions 9
2.4 Equipment Installation 10
2.5 Removal and Treatment of the Working Chamber Filler 10
2.6 Pneumatic unit mounting device 11
2.6.1 Introduction to pressure regulating filter 12
2.7 Installation of dust extraction system 12
2.7.1 Vacuum Cleaner Requirements 12
2.7.2 Vacuum Cleaner Installation 12
2.8 Electrical connection 13
Charpter 3 Device operation 14
3.1 Pre-Run preparation 14
3.2 Power on the device 14
3.3 Device testing 14

3.4 Overview of the cutting process 15
3.5 Tool Insertion and Replacement 16
3.6 Car needle information 18
3.7 Install and disassemble the tray 18
3.7.1 Load tray 19
3.7.2 Remove tray 20
3.8 Program interrupt and stop 20
3.8.1 Interrupt handling method 20
3.8.2 Methods for handling equipment failures 20
3.8.3 Methods for dealing with damaged cutting tools 21
Charpter 4 Operating System Page 22
4.1 Main interface introduction 22
4.1.1 Main Page Function Description 22
4.2 Settings Interface Description 25
Charpter 5 Equipment maintenance and cleaning 28
5.1 Safety Notice! 28
5.2 Accessories replacement warning! 28
5.3 Regular cleaning 29
5.3.1 Cleaning requirements for equipment and parts 29
5.3.2 Clean the spindle chuck 29
5.3.3 Maintenance of the Pneumatic System 30
5.3.4 Check the hose, cable, and connections. 31
5.3.5 Check the pressure regulating filter. 31
5.4 Guide maintenance 31
5.5 Maintenance Schedule 32
5.6 Device calibration 33
Disclaimer 34

Preface

Dear User:

Welcome to choose the YRC-5X Dental-Grade Milling Machine. To ensure safe, efficient, and stable operation, this manual systematically outlines key operational procedures and safety protocols as core guidelines. Before first use, please read the manual thoroughly and strictly follow all operational procedures, parameter standards, and maintenance requirements. Keep the manual in a dry, easily accessible location (e.g., a dedicated file box) for all operators to consult. For product improvement suggestions or operational questions, please contact your designated dealer at any time.

Thank you for your trust and support in our product. We hope you enjoy using it!

Charpter 1 Basic understanding of equipment

1.1 Device Overview

The YRC-5X Dental-Grade Milling Machine is designed for the dental technology field to facilitate digital processing, capable of handling various materials.

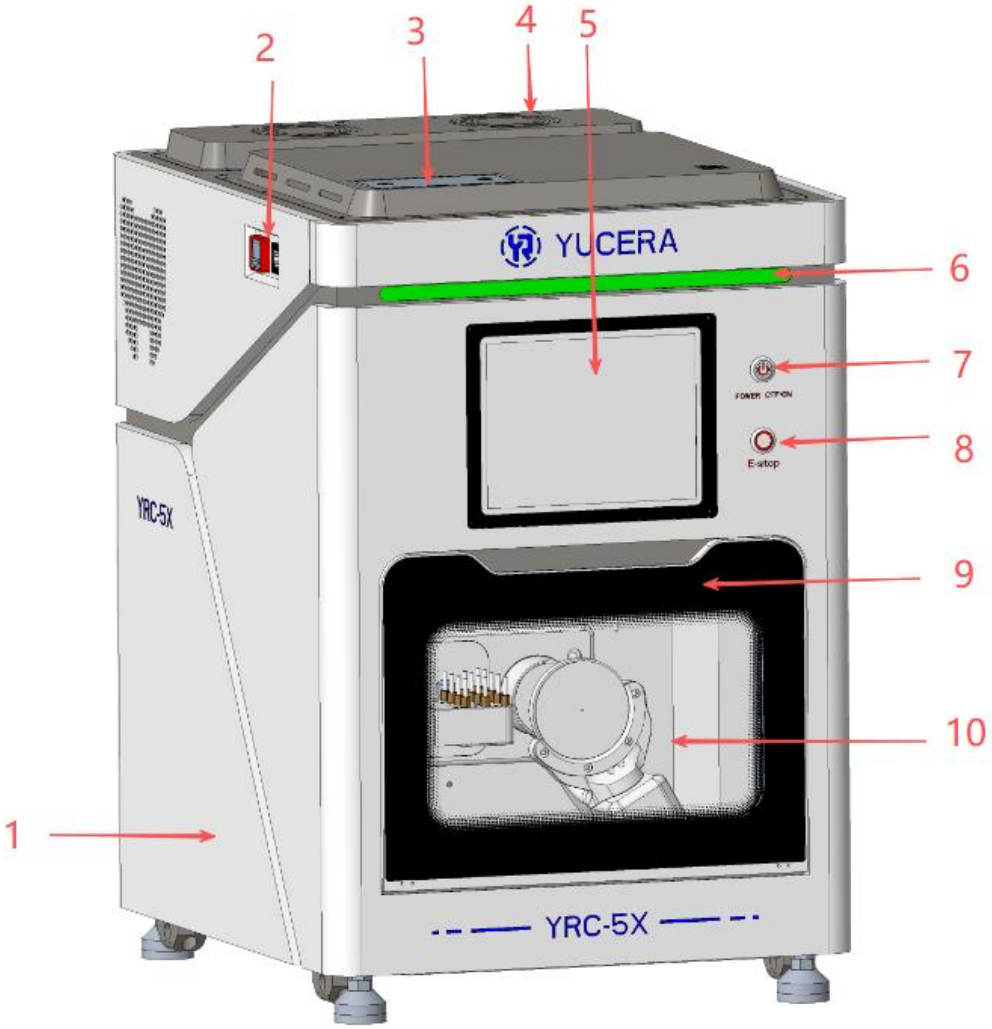

YRC-5X airless and air dual-use model diagram

1.Milling Machine 2.Digital pressure gauge/USB port 3.CMOS battery 4.Cooling Fan 5.Main System 6.Machining alert display bar 7.Power on/off button 8.Emergency stop button 9.Work Chamber door 10.Work compartment window

1.2 Back panel of the device

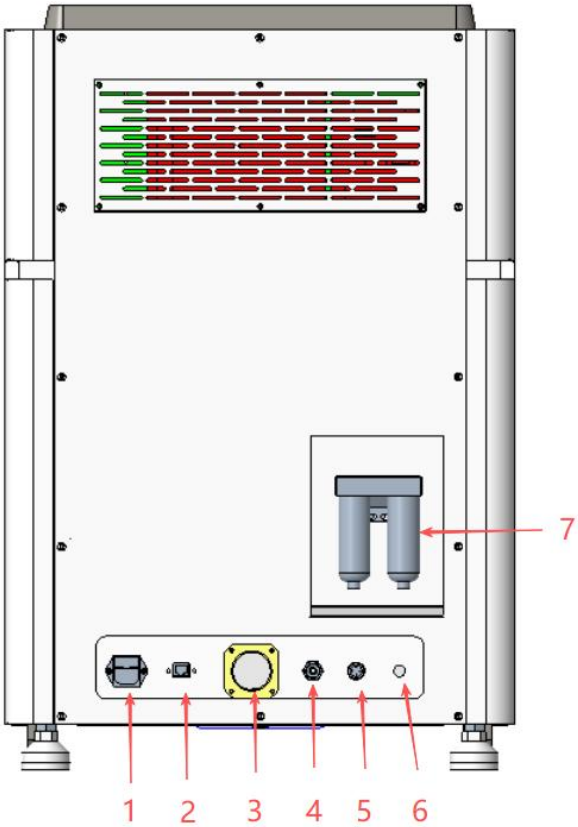

Rear Connection Panel

1.Power inlet connector 2.Network port 3.Vacuum inlet 4.Air intake vent

5.External vacuum cleaner interface 6.Reserved Interface 7.Dual-cup air pressure filter

1.3 Host operation page

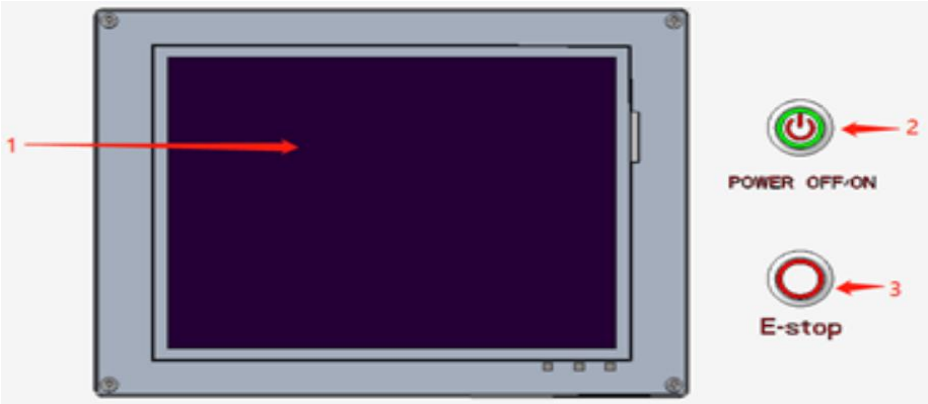

Operating Panel Diagram

1. System display 2. Power on/off button 3. System emergency stop button

1.4 Work chamber door

The work chamber door must be closed during machine operation to prevent personnel injury.

[Note]: Be careful to avoid being pinched when opening or closing the hatch.

- When opening the hatch, hold the handle and pull it outward.
- When closing the hatch, place your hand on the lower edge of the hatch and push it up.

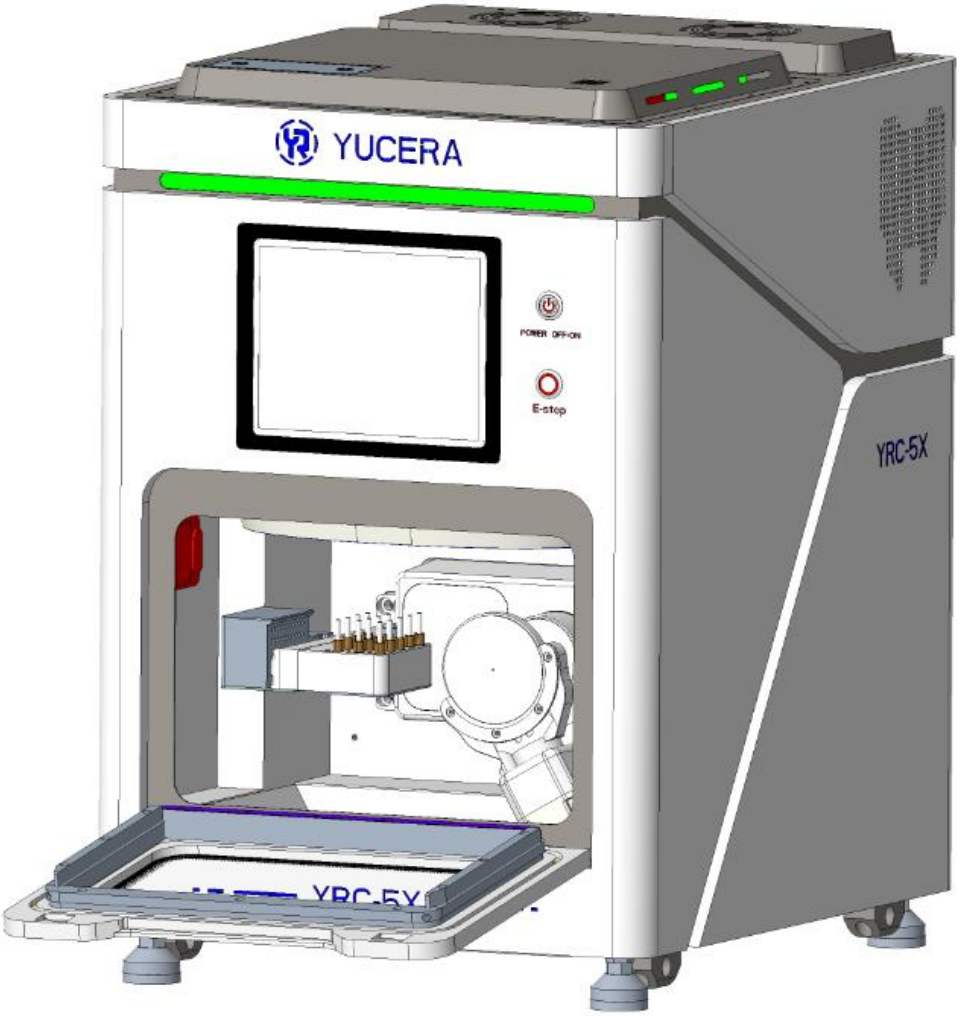

YRC-5X Dental-Grade Milling Machine Open Compartment Rendering

1.5 Work cabin

A compartment used for machining raw materials.

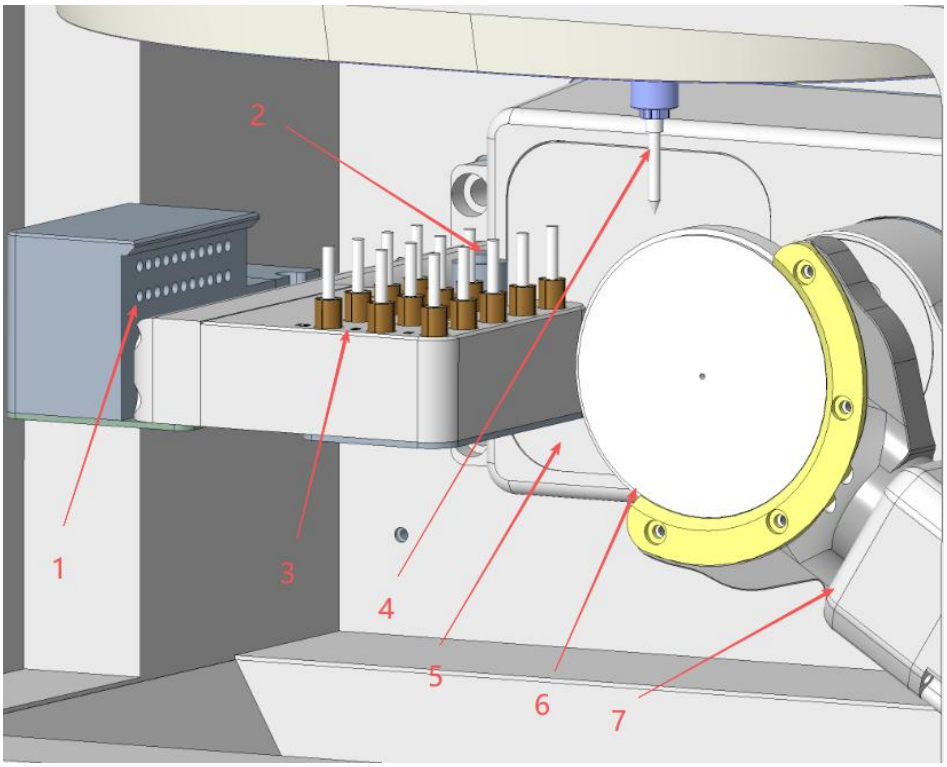

YRC-5X Dental-Grade Milling Machine Work Cabin Diagram

1.Blowing device 2.Tool setting device 3.Tool magazine 4.Spindle

5.Axis a, axis b 6.Work piece fixture 7.Positioning Shaft

1.6 Coolant passage

This equipment's cooling system consists of two components:

1. Air Supply Module: Blowing device equipped with a high-speed brushless turbo fan.
2. External Suction Module: Including suction device and suction hose.

The turbine fan configured in this device adopts a 105000 RPM high-speed turbine design, which can provide strong and stable airflow, quickly remove heat from the cutting area, effectively extend the service life of the tool, and improve machining accuracy and stability. When the equipment is running normally, the fan generates stable high-pressure airflow through the forward rotation of the motor, which is directed and sprayed from the side of the tool magazine, providing forced cooling for the spindle and tools. The airflow directly acts on the machining area, quickly taking away the heat generated by cutting, effectively

preventing tool erosion, work piece deformation, and accuracy drift. This fan does not require external compressed air and can achieve reliable cooling by relying solely on the built-in turbine fan, freeing itself from external air source limitations. It is more flexible in application scenarios and is not subject to site constraints during processing.

The fan adopts a brushless DC motor and a separated electric control structure, combined with a self cooling design, which has excellent heat dissipation effect and can support long-term continuous operation of the equipment. It has strong stability and effectively reduces maintenance frequency in the later stage. At the same time, the overall structure of the fan is compact and small, easy to integrate and install, does not occupy additional space, and has a more reasonable layout. During the operation of the equipment, the external vacuum device connected to the working chamber can timely suck out debris, dust and other impurities generated in the working chamber through the vacuum hole.

A good suction and blowing system can effectively prevent damage and wear to sensitive parts of the machine caused by debris and dust accumulation, ensuring the stability of component operation.

[Note]: The suction and blowing system is only used as an auxiliary cleaning device for impurities during the operation process and cannot replace the routine cleaning work of the machine. If the machine is not thoroughly cleaned regularly as required, it will significantly shorten the service life of the equipment.

1.7 Technical parameter

Specifications	Parameters
Cutting Method	Dry milling
Cutting Material	Zirconium oxide, wax, resin, composite materials
Material Dimensions	Disc diameter 98mm, thickness 10-30mm
Travel Range	X/Y/Z: 190-96-99
Spindle speed	0~60,000 rpm/800 W
Drive	Fully servo-driven electric motor
Cutting Tools	Quantity: 13 Shank Diameter: 4mm
Dimensions	530*650*810mm
Weight	Total cutting machine weight: 195 kg
Required Air Pressure	4.5–7.5 bar
Compressed Air Flow Rate	Approximately 50 litres per minute
Minimum dust extraction capacity	3000 L/min
Rated Power	1500W
Power supply	220-230V AC, 50/60Hz

Charpter 2 Equipment transportation and installation

2.1 Handling, packing and storage

⚠Warning: To ensure proper equipment operation, transport packaging must be handled by qualified operators or maintenance personnel. Please review the following handling precautions carefully.

2.1.1 Safety Guidelines for Transportation

- Before moving the equipment, the center of gravity must be clearly identified. During transportation, any shift in the center of gravity must be strictly avoided to prevent tilting or falling.
- Before moving, check the weight and orientation labels on the equipment's outer packaging to ensure it remains balanced during transportation.
- When using lifting machinery, the force part of the machinery should always be around the center of gravity of the equipment, and the equipment should be shaken as little as possible.
- When lifting or lowering equipment, keep an eye on its tilt. If possible, lower the packaging height to improve safety.
- During handling, only the designated force-bearing areas of the equipment may be used; applying force to non-designated areas is strictly prohibited.
- Equipment outsourcing materials must be removed after installation is completed. They cannot be disassembled before installation.

2.1.2 Packaging

This equipment's transport packaging is specially designed for the intended transportation method and conditions, featuring specialized protective structures to minimize physical damage and other risks during transit. The packaging must be removed before installation. When removing the packaging, ensure its integrity is maintained and keep a spare copy for reuse when the equipment needs to be returned to the factory.

2.1.3 Markings on Outer Packaging.

The equipment is a high-precision instrument with many vulnerable parts inside, so handle it gently during transportation.

The interior contains numerous electronic components and water-resistant mechanical parts, so avoid moisture exposure.

When temporarily placing or storing equipment, place it in the direction of the arrow.

Do not let the packing box be tilted or rolled during transportation and handling.

2.2 Accessories

First, check the delivery list to ensure completeness. Open the machine packaging and count the following items:

Serial Number	Item Name	Specification	Unit	Quantity
1	YRC-5X	530*650*810 mm	Unit	1
2	Carriage needle	4mm	pcs	7
3	Fixture Screw	M4	pcs	4
4	Power cord	European/American standard	pc	1
5	Screwdriver	Phillips, Slotted	Handle	2
6	Tee Fitting	T-Tee/Y-Tee	pc	2
7	Hex Key	1-10	Set	1
8	Air hose	8mm × 5m	pc	1
9	Vacuum cleaner hose	48mm	pc	1
10	Spindle wrench		pc	1
11	Lifting Handle	20-160	pcs	4
12	Wax tray	98*14MM	pc	1
13	Vacuum cleaner control cable		pc	1
14	Vacuum cleaner clamp		pcs	2
15	Fuse rod		pcs	2

Serial Number	Item Name	Specification	Unit	Quantity
16	Spindle detection accessories	Probe, cable	Set	1
17	WIFI Kit	Wireless connectors, network cables	Set	1
18	T-type wrench		pc	1

2.3 Installation conditions

- The installation site must have sufficient load-bearing capacity (approximately 195KG) and a solid, flat surface.
- The indoor temperature should be maintained between 18℃ and 25℃ (the ideal range), with a maximum of 32℃.
- Set the installation location in a dust-free environment.
- The relative humidity of the air must be below 80%
- The power supply must provide 22040 V AC at 50/60 Hz.
- Compression requires compressed air that meets the equipment requirements, with a pressure range of 4.5-7.5bar
- Ensure sufficient operational space around the equipment installation, with specific dimensions shown in the attached diagram.

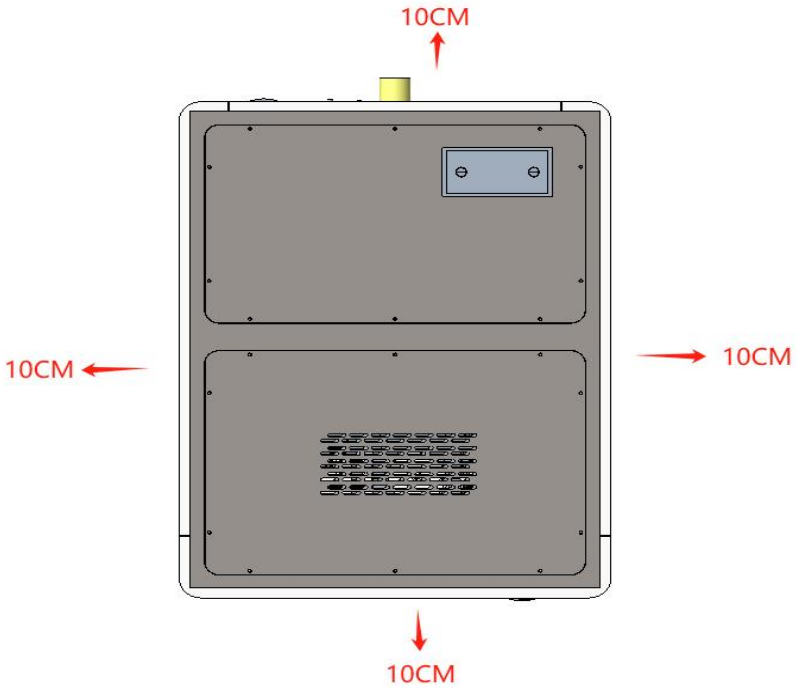

【Note】: Connect the equipment power cable to an independent circuit protected by a fuse, or ensure no other equipment shares this power circuit to effectively prevent voltage fluctuations. Severe voltage fluctuations may interfere with the normal operation of the equipment control system, potentially causing system malfunctions.

2.4 Equipment Installation

The device connection is shown in the figure:

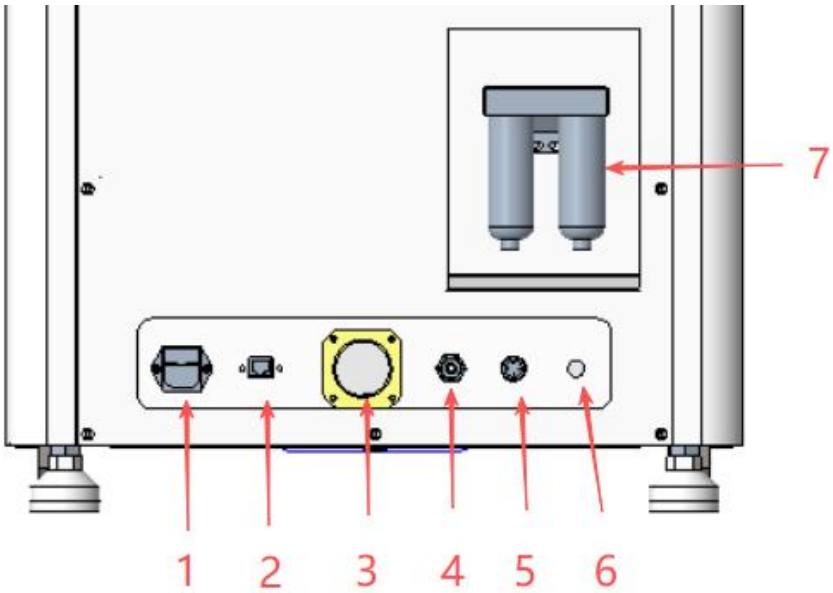

Equipment Connection Diagram

1.Power inlet connector 2.Network port 3.Vacuum inlet 4.Air intake vent 5.External vacuum cleaner interface 6.Reserved Interface 7.Dual-cup air pressure filter

2.5 Removal and Treatment of the Working Chamber Filler

Before the equipment is first started, the transport filler in the working chamber must be removed. This filler protects the spindle and machine tool structure during transportation, preventing damage from vibrations or impacts. The specific operational requirements are as follows:

1. Open the equipment work chamber and remove all internal transport fillers completely;
2. Clean the interior of the work cabin to ensure no debris or filler remains;

3. Store the removed filler properly for reuse when the equipment needs to be transported (e.g., returned to the factory or relocated).

2.6 Pneumatic unit mounting device

1、 The machine is equipped with a dedicated pneumatic unit mounting base with stable structure and precise positioning. It is used for the integrated installation and fixation of the high-speed brushless turbo fan, air pipes and related pneumatic components, ensuring that all parts remain reliably positioned without looseness or displacement during operation. The mounting base features a reasonable layout and easy assembly/disassembly, facilitating later maintenance and component replacement, and providing reliable support for the stable operation of the entire pneumatic cooling system.

2、 The machine supports a dual air supply mode. It can operate independently with the built-in high-speed brushless turbo fan without an external air compressor. It can also be directly connected to an external air compressor via an air pipe according to application requirements. The two modes can be switched easily and quickly by completing the air pipe connection, meeting the needs of different processing scenarios.

3、 Method for connecting an external air compressor:

- Installation and maintenance specification: Ensure that no compressed air flows through the pressure regulating filter during equipment installation and maintenance.
- Pneumatic hose installation inspection: After installing the pneumatic hose and before supplying air, confirm that the hose is firmly inserted into the corresponding connector and that the hose is undamaged.
- Compressed air connection specification: The connection between the machine and the compressed air supply can only be made through the pressure regulating filter supplied with the equipment.

[Note]: The compressed air supplied to the input device must be oil-free and dry. Contaminated compressed air (e.g., moisture or oil) may damage the spindle and electrical components.

2.6.1 Introduction to pressure regulating filter

Compressed air is connected to the machine through a pressure regulator and filter, which can be used to regulate the pressure input to the machine and separate moisture from the gas.

Pressure regulating filter diagram

2.7 Installation of dust extraction system

2.7.1 Vacuum Cleaner Requirements

Vacuum cleaners meeting all the following characteristics must be used:

- Specifically designed for dental applications;
- Equipped with an M-grade filter;
- Adaptable to the working environment of machine tools;
- Equipped with protective devices to prevent operator injury;
- Minimum airflow capacity must reach 3000 litres per minute.

2.7.2 Vacuum Cleaner Installation

1. Pre-installation preparation: Before installing the vacuum cleaner, carefully read the installation and operation manual provided with the equipment.

2. Installation procedure:

- Interface compatibility check: Verify that the vacuum inlet matches the flexible hose

(inner diameter 49mm); if incompatible, use an adapter.

- Connecting the Flexible Hose to the Vacuum Cleaner: Insert one end of the flexible hose into the vacuum cleaner inlet, ensuring a secure connection.
- Connecting the Flexible Hose to the Machine: Insert the other end of the flexible hose into the dust extraction port of the machine tool, ensuring a secure connection.
- Automatic start/stop configuration: To enable machine-controlled activation/deactivation of the vacuum cleaner, connect the machine and vacuum cleaner via an interconnect cable.

2.8 Electrical connection

1. Aviation connector connection: Sequentially connect the aviation connectors on the cutting machine and the main unit using the corresponding connection cables. Secure the connectors to ensure a stable connection.

2. Power Connection:

- Insert one end of the supplied power cable into the power socket on the main unit's connection panel.
- Insert the other end of the power cord into a socket equipped with both earth leakage protection and overload protection.

3. Voltage Usage Precautions:

[Important]: Severe voltage fluctuations may damage the equipment. Significant fluctuations could cause the control unit to cease operation, potentially triggering system failures. Adhere to the following requirements:

- The device's power cable must be connected to a dedicated circuit; alternatively, ensure no other equipment connected to the same circuit is likely to cause significant voltage fluctuations during start-up.
- Where severe voltage fluctuations cannot be avoided in the operating environment, install an additional voltage stabiliser to prevent damage to the equipment from extreme fluctuations.

Charpter 3 Device operation

3.1 Pre-Run preparation

Before starting the device, complete the following checks to ensure it meets the operating conditions:

1. Ensure the equipment is placed on a flat and stable surface to prevent vibration or shaking.

2. Check that all parts are properly installed and all connections are functioning normally;

3. Ensure all parts and accessories are securely fastened without any looseness or displacement.

4. Confirm all control systems are installed and can operate normally after power-on testing.

3.2 Power on the device

1. All equipment has been fully installed with sufficient compressed air supply, and the work chamber door remains closed. Note that the door must stay closed during startup and operation.

2. Press the power button on the host control panel to turn on the device.

3. The device automatically resets to its original position. After the control system is fully activated, the device will enter the automatic reset program. Subsequent operations can only be performed after the reset action is completed and the display reminder window is closed. Do not operate the device before resetting to the origin.

3.3 Device testing

After the first installation or reinstallation after transportation, test the basic performance of the equipment as follows:

1. Insert the needle into the device;

2. Do not load the material tray. Load any program and run the device.

3. Monitor the equipment's operational status and verify the proper functioning of functions including gear shifting, air blowing, and shaft rotation.

4. Confirm the device is functioning properly. If the device fails to operate, contact the supplier immediately.

3.4 Overview of the cutting process

[Important Notes]:

- Before processing, make sure to read the operation manual and safety guidelines, and familiarize yourself with the operational standards and safety requirements.
- Before operation, thoroughly inspect the needle and material tray for damage. Any damage may cause part defects and equipment failure during processing.
- The NC program for the equipment, generated by CAM software like Hyper DENT through layout and calculation, contains all machining parameters and instructions. It can be transmitted to the equipment's operating system via USB interface or network communication.

YRC-5X airless and air dual-use model processing steps:

1. Open the layout software, select the required material block size and type based on processing needs, then complete the layout.

2. Insert the adapter needle into the designated position of the device as specified by the installation requirements.

3. Position the work piece tray on the equipment's tray mounting station, ensuring it is securely clamped without any looseness.

4. Click the "Load" button on the device interface, then select the required machining program from the program list.

5. After confirming the correct procedure selection, click the 'Start' button to initiate the device's processing operation.

3.5 Tool Insertion and Replacement

- Use the correct adapter needle; mismatched model specifications may damage the spindle chuck or tool magazine.
- The handle of the lathe needle knife should be chamfered with sufficient dimensions, otherwise the chuck will be damaged.
- Do not use a needle with a blade diameter exceeding the handle diameter (φ4mm).

You can insert the 7 supplied burs into the tool magazine as shown in the figure. The device can automatically change burs during machining.

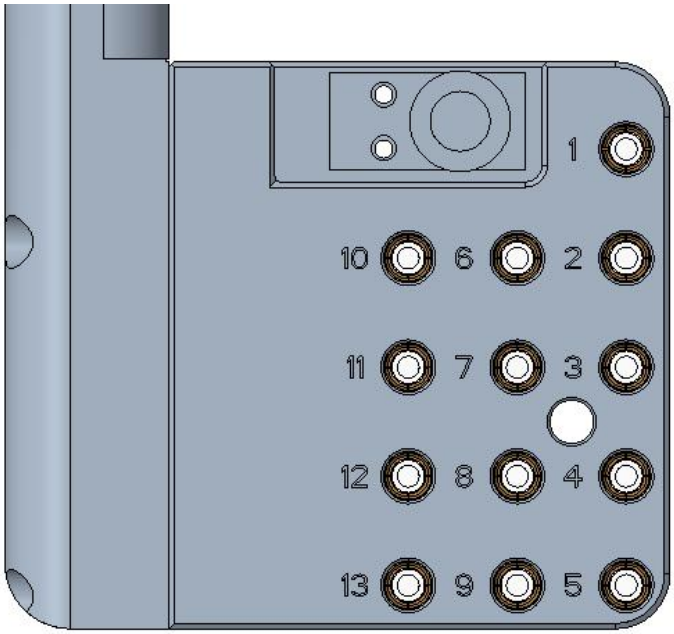

Tool Magazine Diagram

You can install the needle in two ways:

- Insert the needle into the tool magazine manually.

① Set the spindle to the safe position, then proceed to the second page of the operating system. Hold the center of the spindle's needle with your hand and click' Release Tool' to remove it.

② Insert the new needle into the spindle. Ensure the needle's fixing copper ring (as shown) is tightly secured against the spindle chuck. Then press the' Release Clamping Tool' button to secure the needle.

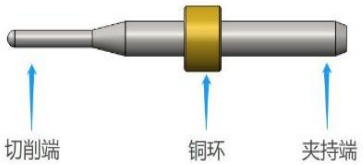

wheel diagram

③ Press the "Align" button to measure the length of the new blade and automatically record it in the system.

[Note]: After each tool release, always check the blade length regardless of needle replacement. Failure to do so may damage work pieces or even cause blade breakage.

- Through the spindle.

① Move all axes to default positions to ensure the fixture is free of material blocks and the spindle chuck is clear of lathes. If lathes are detected in the chuck, navigate to the second page of the operating system and click 'T0' to automatically return the lathes to the tool holder.

② Remove the old needle one by one in the tool holder.

③ Insert the new pins into the corresponding tool holders in sequence, ensuring the positioning copper rings are fully embedded to prevent improper installation.

④ Check the needle placement sequence and position of the new needle to ensure proper functioning of the automatic needle replacement feature.

[Caution]:

- Avoid direct impact when installing the needle to prevent damage that may affect machining accuracy or cause equipment failure.
- If the lathe needle runs beyond the preset time or if the workpiece damage is suspected to be caused by the lathe needle, it should be replaced promptly.
- The tool library is prioritized for tool change, except when the spindle tool is damaged and length measurement is impossible.
- The needle must be placed into the designated holder according to the preset specifications. Misplacement or mixing is strictly prohibited.

- Only the personnel who are familiar with the equipment and software can replace the needle after training.
- The operating system displays the default tool number. If all tool pins are properly returned to the tool library, the tool number will show as '0', as shown in the figure.

Tool Number Display

- The system checks the length of the needle before and after each extraction or reinsertion. The length deviation must not exceed the preset range. If the needle is not detected or the deviation exceeds the range, the system will display the following message.

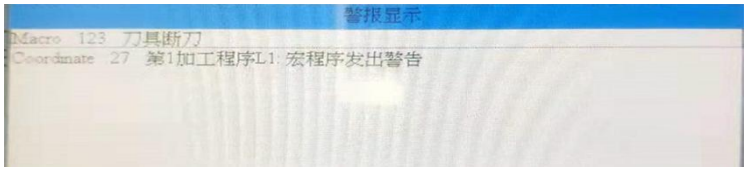

tool break diagram

- If the tool error message appears during processing, check the lathe needle or replace it and restart the program.

3.6 Car needle information

Tool Number	Specifications	Tool Number	Specification
T01	ZIR Φ2.0	T05	PMMA Φ2.0
T02	ZIR Φ1.0	T06	PMMA Φ1.0
T03	ZIR Φ0.6	T07	PMMA Φ0.6
T04	Φ0.3		

3.7 Install and disassemble the tray

The YRC-5X airless and air dual-use model fixture is an open-type design, with the raw material mounting fixture (as shown in the figure) installed.

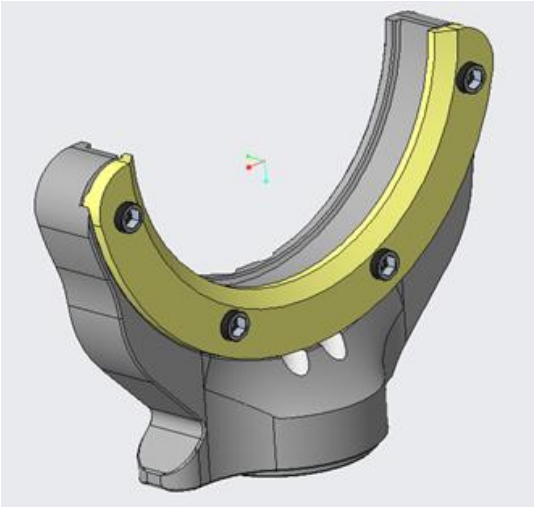

Fixture Diagram

3.7.1 Load tray

The Φ98 circular tray must be secured using a dedicated fixture. The specific procedure is as follows:

Open the equipment access door and thoroughly clean the recessed area of the fixture to ensure no debris or contaminants remain.

Using a screwdriver, loosen the three fixing screws on the fixture's clamping plate one by one to create space for placing the tray.

Gently position the Φ98 circular material tray within the fixture. Re-tighten the three previously loosened fixing screws using the screwdriver to securely fasten the tray, as illustrated.

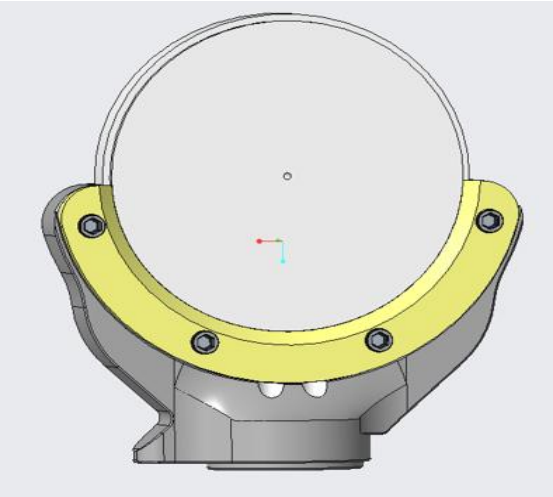

Material Tray Securing Diagram

[Note]: Ensure all screws are securely tightened. Any movement or vibration of the material tray during cutting may cause equipment damage.

3.7.2 Remove tray

To remove the part, simply loosen the fixing screw and pull it out.

3.8 Program interrupt and stop

[Note]: When the program is interrupted or stopped, the operating system page will display a corresponding alert window to indicate the exception.

If the device's air pressure is insufficient, the program will pause automatically. When the pressure returns to the normal range, the program will restart and continue.

You must manually cancel the current program when the following conditions occur:

- When the device fails;
- When the tool is damaged;
- During a sudden power outage;
- When the cutting fluid supply is abnormal.

If the program is canceled, restart the program in the device system to resume operation.

3.8.1 Interrupt handling method

If an interrupt occurs during program execution, the operating system page displays the corresponding information.

The device shows insufficient air pressure. Check the following:

- Check whether the pressure values on the pressure-adjusted filter element and the barometer are within the correct range.
- whether there is air leakage in the trachea;
- Check if the air compressor is working properly.

3.8.2 Methods for handling equipment failures

When a device failure is triggered by an emergency, the control unit issues corresponding commands, and the operating system interface displays the fault-related error message and error code for the operator to identify.

If the alarm cannot be resolved through standard troubleshooting, immediately document

all alarm details (including error codes and fault symptoms) and contact the manufacturer's after-sales service for professional assistance.

3.8.3 Methods for dealing with damaged cutting tools

When the tool breaks during processing, the equipment cannot detect it immediately, and the spindle will continue rotating and cutting until the next lathe needle is replaced. Only during the lathe needle length measurement, if the length is abnormal, the program will report an error, and the error message will be displayed on the operating system interface.

Common causes of breakage:

- The wheel itself is damaged or excessively worn;
- The material selected for layout does not match the material actually processed
- The lathe needle is incorrectly positioned or manually inserted into the spindle at an improper time, making it unsuitable for the current machining step. Therefore, the lathe needle must be replaced. The steps are as follows:

①Open the working hatch of the equipment;

②Remove the broken needle from the work chamber;

③If the lathe needle is retrieved from the tool magazine by the spindle, first verify the correct placement of the needle in the tool magazine. After confirmation, insert the new compatible lathe needle into the designated position.

④If the needle is manually loaded onto the spindle, verify that the damaged needle matches the designated needle displayed on the operating system interface, then prepare and load the new correct needle.

⑤ Close the work compartment door and restart the programme.

Charpter 4 Operating System Page

4.1 Main interface introduction

The main interface serves as the core operational and monitoring hub of the equipment, integrating full-process machining functions with visualised status modules. This interface facilitates core operations including machining data output, real-time operational feedback, and fault alert notifications. Upon equipment startup, it will automatically transition to the following main interface.

Main Interface Diagram

4.1.1 Main Page Function Description

※Loader: Click the "Loader" button on the screen to select a machining programme. All programmes within the system can be opened for use, with the default format being NC documents.

※Import program: When copying programmes via USB, click the "Import programme" button and select the required programme from the left-hand list in the pop-up window.

※System Operation: Clicking this button automatically navigates the system to the second auxiliary page.

※ Break Point Processing: Resumes machining after the program is interrupted due to an abnormal condition.

※ Boot to Zero: Press this button to initiate the homing sequence for all axes of the device.

※ Start Up: Runs the currently loaded program.

※ Pause: Pauses the device during machining.

※ Reset: Resets the current device status (machining or alarm mode), typically used to clear alarm states.

- Axis Coordinate Information Display

Machine coordinates		absolute coordinates	
X	22.027	X	-149.953
Y	37.689	Y	44.959
Z	4.850	Z	64.999
A	59.998	A	59.998
B	-29.996	B	-29.999

- Status Display Description

Displays the current feed rate, spindle speed, machining progress, file processing time, current tool number, and current line number.

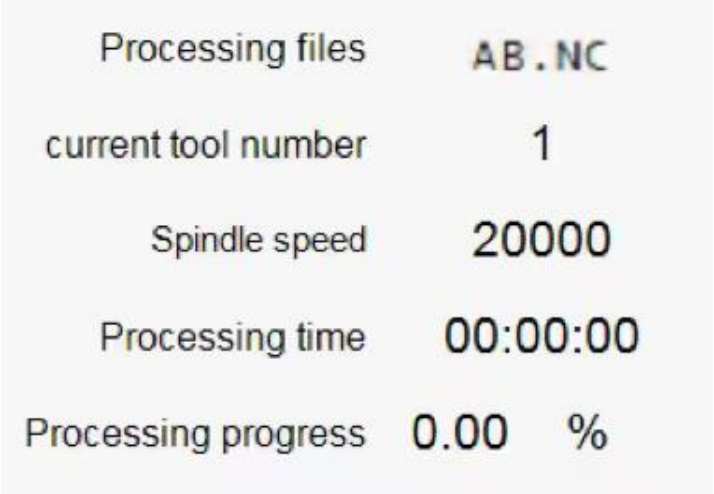

- Process Display

Feed rate progress bar control. This progress bar enables adjustment of machining speed (increase or decrease).

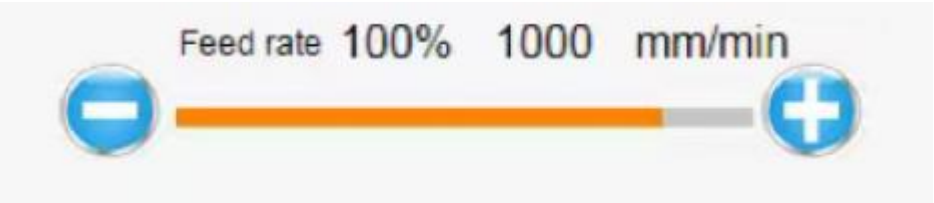

- Machining status display

Status	Colour
Processing	Green
Alarm	Red
Processing complete	Green & Red Alternating
Idle Status	Blue

4.2 Settings Interface Description

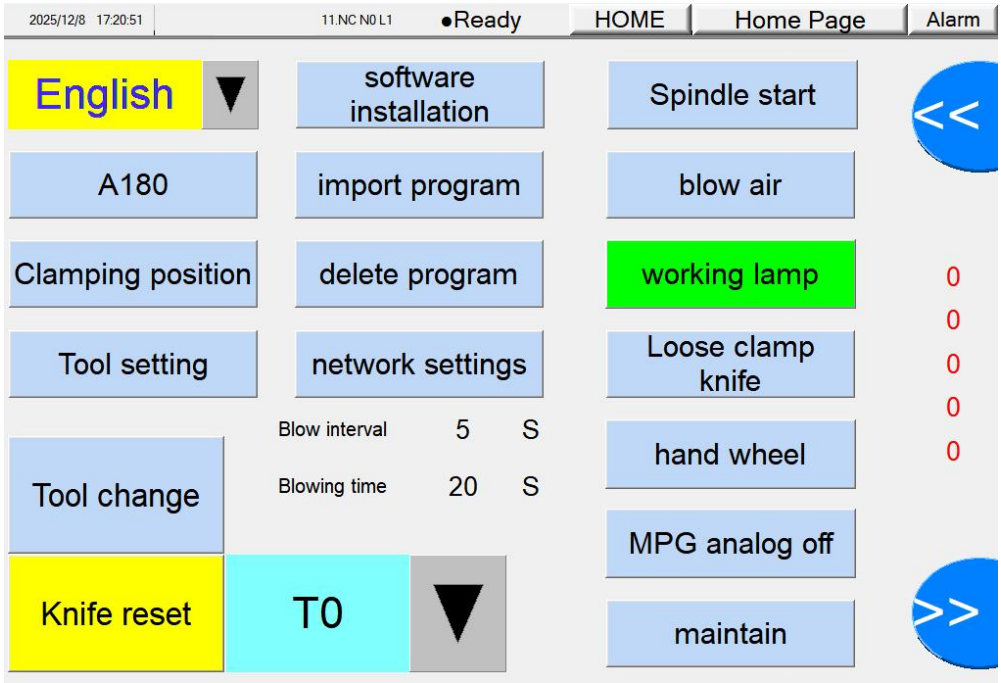

Settings Interface Diagram

- Clamping Position

When clamping a work piece is required, click "Clamping position" and the machine's axes will move to a position facilitating work piece clamping.

- Tool setting

Upon clicking the "Tool setting" button, the tool length of the turning tool currently mounted on the spindle will be measured and recorded in the system.

- Tool change

Clicking the "Tool change" button initiates manual tool replacement. Following tool change, tool setting is automatically completed.

- Knife reset

Pressing the "Knife reset" button automatically resets the system's currently active tool number to tool number 0.

- Software installation

This button is primarily used for system software upgrades.

- Delete program

When the system requires deletion of excess stored programme files, click the "Delete

programme" button and select the files to be deleted in the pop-up window.

- Network settings

When connecting the device to a network, access the "Network settings" interface to manually configure the correct IP address and gateway, enabling NC file transmission over the network.

- Spindle start

Manually activate spindle rotation.

- Working lamp

Provides illumination for the machine's working area.

- Loose clamp knife

Should the lathe needle malfunction or become damaged requiring replacement, click "Loose clamp knife" to open the spindle chuck and remove the needle. After correctly inserting the new needle, click again to close the spindle chuck.

[Note]: Each time the tool is removed and reinserted or replaced, it is essential to click "Tool setting" to perform a current tool length detection.

- Hand wheel

Press this button to manually adjust the position of each axis.

- Maintain

Clicking "Maintain" displays a pop-up window showing the device's system serial number and usage expiry date.

- <<

Return to the previous screen.

- >>

Upon clicking the ">>" button in the system interface, an auxiliary page requiring password verification will appear. Access this page via password authentication to store and retrieve coordinates, modify external offset coordinate parameters, and simultaneously view real-time coordinate information and the current tool position.

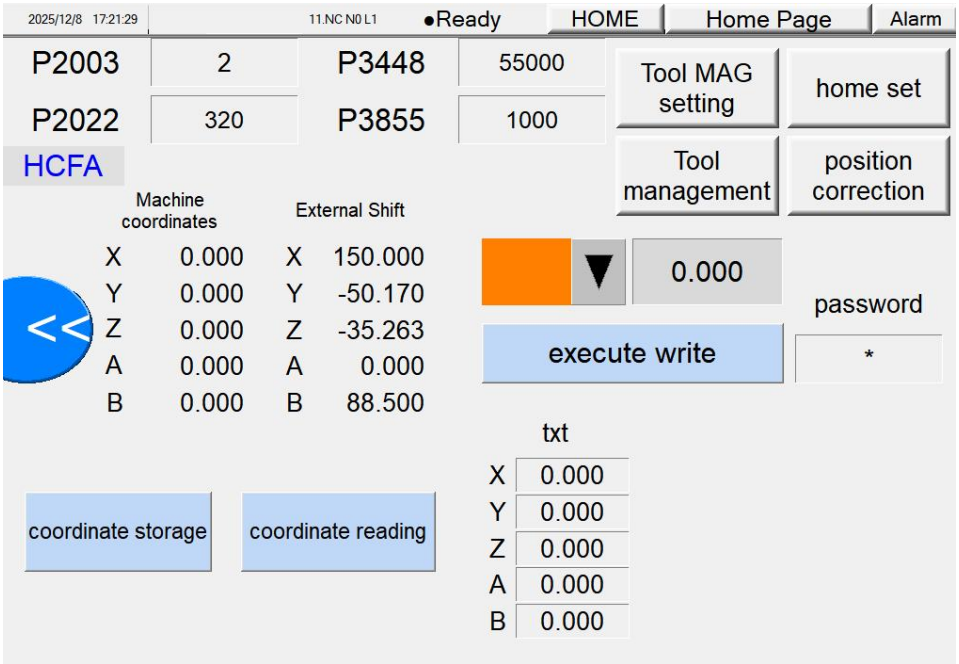

- Coordinate Save & Recall

Store the current device's set coordinates, or retrieve previously saved coordinates via this function when the device experiences offset.

- Execute write

Select the axis requiring modification, input the coordinate values, and click to execute the write operation to overwrite the original coordinates.

- Coordinate Display Area

Displays the current mechanical coordinates and the set external offset coordinates.

- TOOI MAG setting

Click to open the tool magazine tool holder coordinate setting interface.

- Home set

Switch between absolute and incremental values; usable when the origin switch is damaged.

- Tool management

Display the current tool's usage life and maximum life.

- Position correction

Calibrate each axis position using the automatic probe to determine if any changes have occurred.

Charpter 5 Equipment maintenance and cleaning

5.1 Safety Notice!

To ensure stable processing accuracy and extend the service life of the equipment, we recommend regular maintenance and care. Before maintenance, make sure all axes are adjusted to a safe position, and turn off the power and unplug the power cord to ensure safe operation.

⚠ Warning: After powering off the device, residual electricity may remain in internal components. To avoid electric shock, wait several minutes after power-off until all components are fully discharged before performing maintenance.

⚠ Note: When cleaning the equipment, use a damp cloth. For better cleaning results, choose a suitable cleaner. Do not use abrasive cleaners to avoid scratching the equipment surface, or cleaners containing corrosive components for rubber parts to prevent aging and damage to seals, hoses, and other components.

All maintenance and related operations must be performed by professionally trained and certified personnel. Unauthorized operation is strictly prohibited. Before inspecting the equipment's pneumatic system, the main switch must be turned off, and the system's internal pressure and the entire air duct must be depressurized to atmospheric levels to prevent high-pressure gas release and potential safety hazards.

5.2 Accessories replacement warning!

Using non-manufactured or unsuitable parts may pose risks to operators and could result in equipment damage or complete failure. Therefore, only original manufacturer parts or manufacturer-authorized parts are permitted.

For questions, contact the manufacturer's customer service.

5.3 Regular cleaning

5.3.1 Cleaning requirements for equipment and parts

1. Daily cleaning can extend the service life of individual components and prevent malfunctions caused by debris.

2. Regular cleaning can extend the service life of the equipment.

3. For cleaning plastic components, use a suitable liquid cleaner to ensure the process does not damage the plastic surface or material properties.

4. To prevent dust or impurities from entering the core components and causing malfunctions or damage, do not use a gas gun to clean the equipment's interior.

5. When installing materials, ensure the fixture and screws are clean to achieve optimal clamping performance.

6. The tool magazine and tool setter must be free of chips and debris to ensure accurate length measurement and tool replacement. If any damage is found, contact the manufacturer immediately for replacement.

5.3.2 Clean the spindle chuck

Avoid spraying oily mist or compressed air with oil-water mixture directly onto the spindle head, as this may allow contaminants to infiltrate the spindle bearing, potentially impairing its rotational performance or causing bearing damage.

The spindle chuck and the inserted lathe needle must be kept clean, if impurities enter the spindle, it will increase the resistance of the spindle rotation, and affect the rotation concentricity.

The spindle chuck should be cleaned weekly under normal conditions. If the lathe needle is damaged due to impact, the spindle chuck must also be cleaned simultaneously.

Note: Always use the dedicated tool to handle the spindle chuck, as shown in the figure.

Diagram of the hexagonal wrench for the spindle chuck

⚠ Warning: Do not close the spindle chuck when it is not loaded. Rotating the spindle without a chuck may cause damage. Ensure the chuck always has a lathe needle.

Clean the spindle chuck:

a. Reset the device to a safe position;

b. Confirm that the spindle has stopped rotating;

c. Use a specialized tool to remove the spindle chuck;

d. Clean the hole for the chuck to be placed on the spindle;

e. Clean the chuck with a small brush to ensure there are no residual impurities on its surface.

d. Reinstall the cleaned chuck onto the spindle, ensuring it is securely tightened.

5.3.3 Maintenance of the Pneumatic System

1. Regularly check whether the fixing screws of the pneumatic unit mounting base are tight to ensure all components are securely installed without looseness or displacement.

2. Keep the mounting base and surrounding air pipes clean to avoid accumulation of chips and dust, which may block the air path and affect component heat dissipation.

3. Inspect all connectors for good sealing, free from aging, damage or air leakage. Replace any defective parts immediately if abnormalities are found.

4. Before cleaning or maintaining the equipment, turn off the power and air supply first to ensure safe operation.

5. If the equipment will not be used for a long time, wipe the pneumatic unit and mounting base clean, and take proper dustproof and moisture-proof protection measures.

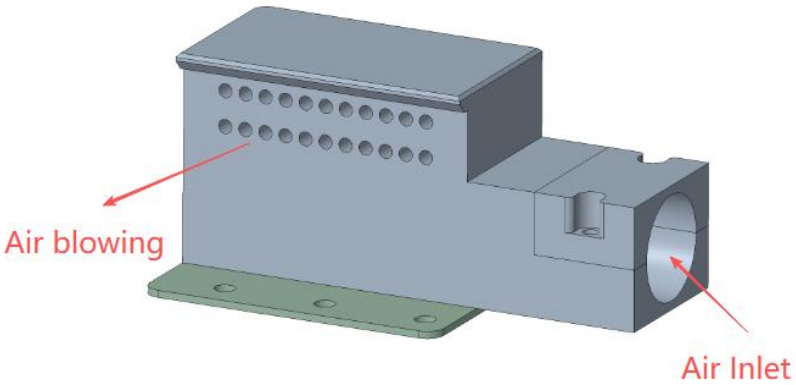

Pneumatic System Diagram

5.3.4 Check the hose, cable, and connections.

i. First, power off the equipment and cut off the compressed air supply before conducting the inspection.

ii. Check the hose and cable connections to ensure they are properly secured; also verify that all connections on the connection plate are tight and not loose.

iii. If the hose or cable is damaged, do not restart the device. Immediately replace the damaged component with a spare part.

iv. If cables or hoses are loose, reinsert them into the corresponding connection points. If the connection is damaged, immediately stop using the equipment and contact after-sales service for assistance.

5.3.5 Check the pressure regulating filter.

Regular inspection: The air source dryer should undergo a comprehensive monthly inspection. As it typically contains integrated filter components, any impurities affecting its performance during inspection must be removed to ensure proper functioning of the filters.

Disassembly and cleaning: The dryer must be disassembled from the equipment annually for thorough cleaning of internal components to ensure efficient operation.

Cleaning agent selection: Neutral cleaning agents should be used during cleaning. The use of corrosive substances such as chemicals, organic solvents, thread locking agents, synthetic oils, cutting fluids, salts, or alkalis is strictly prohibited. These corrosive substances may cause rusting of dryer components or damage to rubber and resin parts, thereby affecting their normal operation.

[Note]: If the air source dryer becomes contaminated, it may cause equipment damage. Regular inspection and maintenance should be performed as required.

5.4 Guide maintenance

Regular maintenance of the screw and guide rail helps maintain machining accuracy and prolong equipment lifespan. The procedure is as follows:

①Turn off the device power.

②Remove the screws connecting the device's side cover and rear cover, then detach the rear cover as shown in the diagram.

③Use a vacuum cleaner to remove debris from inside the equipment, then wipe the dirt off the screw rod and guide rail with clean paper towels.

④Apply grease evenly to the cleaned screw rod and guide rail surfaces.

⑤Reinstall the removed cover plate. If you encounter any issues during maintenance, contact customer service immediately.

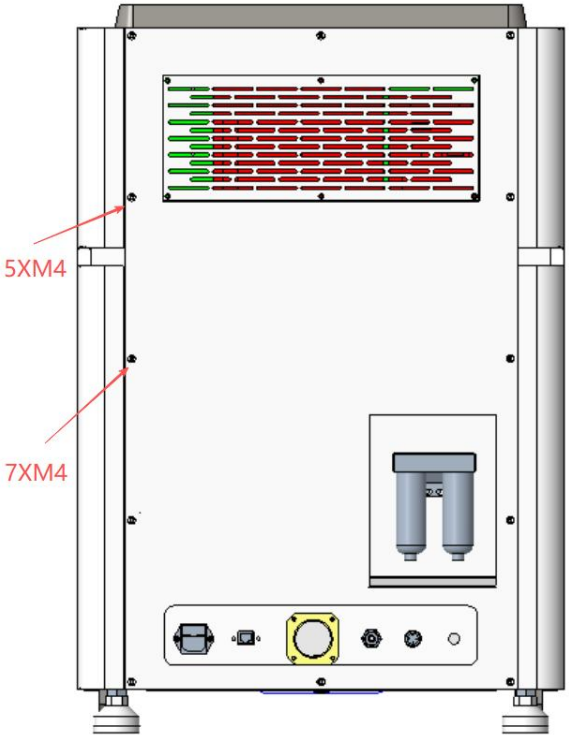

Equipment cover plate removal diagram

5.5 Maintenance Schedule

Maintenance Project	period
Clean the work chamber, tool setter, tool magazine, and needle holder.	every day
cleaning spindle chuck	weekly
Clean the air blowing device	weekly
pressure regulating filter	weekly
Clean the screw rod and guide rail	semiannually
accessory equipment	weekly
machine tool calibration	if necessary

5.6 Device calibration

This equipment has undergone professional calibration before leaving the factory. If the processed products meet quality standards (with no defects), no additional calibration is required.

The calibration process requires a certain amount of time, and improper operation may cause equipment failure or even irreversible damage. It must be performed with caution.

If the processing result is not as expected, the working conditions should be adjusted first, including checking whether the work piece is fixed firmly, the wear and installation status of the turning needle, and whether the processing material meets the equipment compatibility requirements.

Before equipment calibration is required, you must contact the supplier for professional guidance. During calibration, strictly control the accuracy of reading and entering measurement data. If any operational issues arise, immediately stop the calibration process and continue only after confirming with the supplier.

Disclaimer

To ensure proper equipment operation and protect both parties' legitimate rights, as the manufacturer, we hereby inform you: Please carefully review the following disclaimer before reading and using this equipment manual. By starting or using this equipment, you acknowledge and accept all terms of this disclaimer and will comply with its provisions.

1. The operational guidelines and safety precautions outlined in this equipment manual are designed to ensure safe and standardized operation. Please read and fully understand all content, and strictly follow the specified procedures throughout your use. The manufacturer shall not be held liable for any accidents, personal injuries, or property damage resulting from non-compliance with these guidelines or procedures.

2. Usage Restrictions: The information and operational guidelines provided in this equipment manual are strictly limited to the device's intended design purpose and specified usage scenarios. Any use of the equipment in unexpected, improper, or hazardous ways is strictly prohibited. The manufacturer shall not be held liable for any losses, personal injuries, or property damage resulting from improper use of the equipment.

3. Disclaimer: All information and content in this equipment manual are provided based on existing knowledge and technology. The manufacturer has made every effort to ensure their accuracy and completeness. However, the manufacturer shall not be liable for any loss, damage, or inconvenience caused by errors, omissions, or inaccuracies in the manual.

4. Legal Compliance: Users must comply with applicable laws, regulations, and rules to ensure their equipment usage meets regulatory requirements. The manufacturer shall not be liable for any consequences arising from users' non-compliant equipment use.

5. Warranty Limitations: The warranty coverage and duration are subject to the specified warranty terms. The manufacturer shall not be liable for any issues or damages beyond the warranty scope or period. Please read and understand this disclaimer in detail before using the equipment.

If you have questions about safe operation of the device or need additional information,

please contact the manufacturer or authorized representative. By using this device, you acknowledge and agree to the terms of this disclaimer, and accept the potential risks and liabilities associated with its use.