YRC-8S Dental-Grade Milling Machine

Product Manual

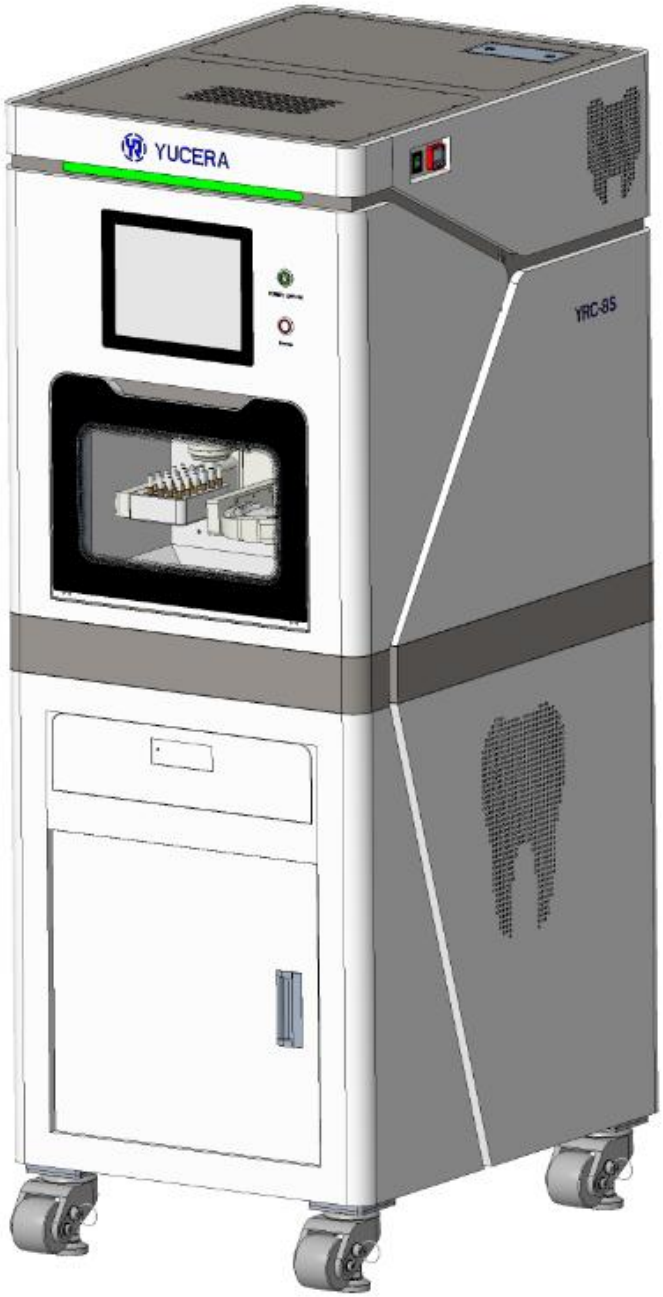

catalogue

Preface I
Charpter 1 Basic understanding of equipment 1
1.1 Device Overview 1
1.2 Back panel of the device 2
1.3 Host operation page 3
1.4 Work chamber door 3
1.5 Work cabin 5
1.6 Coolant passage 5
1.7 Technical parameter 6
Charpter 2 Equipment transportation and installation 7
2.1 Handling, Packing and Storage 7
2.1.1 Safety Guidelines for Transportation 7
2.1.2 Packaging 7
2.1.3 The label is on the outer packaging. 8
2.2 Accessories 8
2.3 Installation conditions 9
2.4 Equipment Installation 10
2.5 Removal and disposal of work chamber fillers 12
2.6 Pneumatic unit mounting device 12
2.6.1 Introduction to pressure regulating filter 12
2.7 Install a water circulation filtration system. 13
2.7.1 Requirements for the filtration tank 13
2.7.2 Installation of circulating filtration water tank 13
2.8 Installation of Spindle Cooling Water Circulation and Filtration System. 14
2.8.1 Water-cooled machine requirements 14
2.8.2 Installation of water-cooled machines 14
Charpter 3 Device operation 16
3.1 Pre-Run preparation 16
3.2 Power on the device 16
3.3 Device testing 16

3.4 Overview of the milling process 17
3.5 Insertion and replacement of the wheel hub 18
3.6 Car needle information 20
3.7 Install and disassemble the tray 20
3.7.1 Load tray 21
3.7.2 Remove tray 22
3.8 Program interrupt and stop 22
3.8.1 Interrupt handling method 22
3.8.2 Methods for handling equipment failures 23
3.8.3 Methods for dealing with damaged milling tools 23
Charpter 4 Operating System Page 25
4.1 Main interface introduction 25
4.1.1 Function description of the Main Page 25
4.2 Set interface description 28
Charpter 5 Equipment maintenance and cleaning 32
5.1 Safety Notice! 32
5.2 Accessories replacement warning! 32
5.3 Regular cleaning 33
5.3.1 Cleaning requirements for equipment and parts 33
5.3.2 Clean the spindle chuck 33
5.3.3 Check the hose, cable, and connections. 34
5.3.4 Check the pressure regulating filter. 34
5.4 Guide maintenance 35
5.5 Cleaning of the circulating water tank 36
5.5.1 Cleaning of the circulating water tank 36
5.5.2 Maintenance of water-cooled machines 36
5.6 Maintenance Schedule 38
5.7 Device calibration 38
Disclaimer 39

Preface

Dear user:

Welcome to your YRC-8S Dental-Grade Milling Machine. To ensure safe, efficient, and stable operation, this manual systematically outlines key operational procedures and safety protocols as core guidelines. Before first use, please read the manual thoroughly and strictly follow all operational procedures, parameter standards, and maintenance requirements. Keep the manual in a dry, easily accessible location (e.g., a dedicated file box) for all operators to consult. For product improvement suggestions or operational questions, please contact your designated dealer at any time.

Thank you for your trust and support in our product. We hope you enjoy using it!

Charpter 1 Basic understanding of equipment

1.1 Device Overview

The YRC-8S Dental-Grade Milling Machine is designed for the dental technology field to facilitate digital processing, capable of handling various materials.

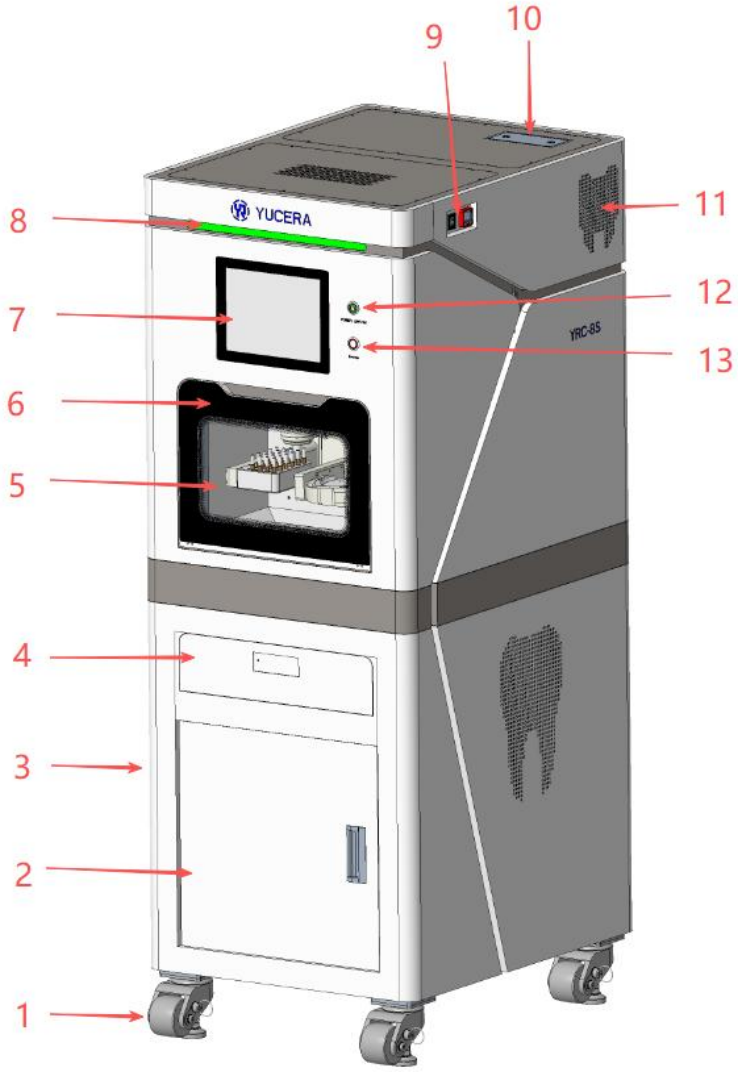

YRC-8S Schematic Diagram

1.Forming wheel 2.Lower compartment door 3.milling machine 4.Storage drawer

5.Viewing window 6.Working compartment door 7.Main system

8.Machining alarm indicator bar 9.Digital pressure gauge/USB port 10.CMOS battery

11.Cooling fan 12.Power On/Off Button 13. Emergency Stop Button

1.2 Back panel of the device

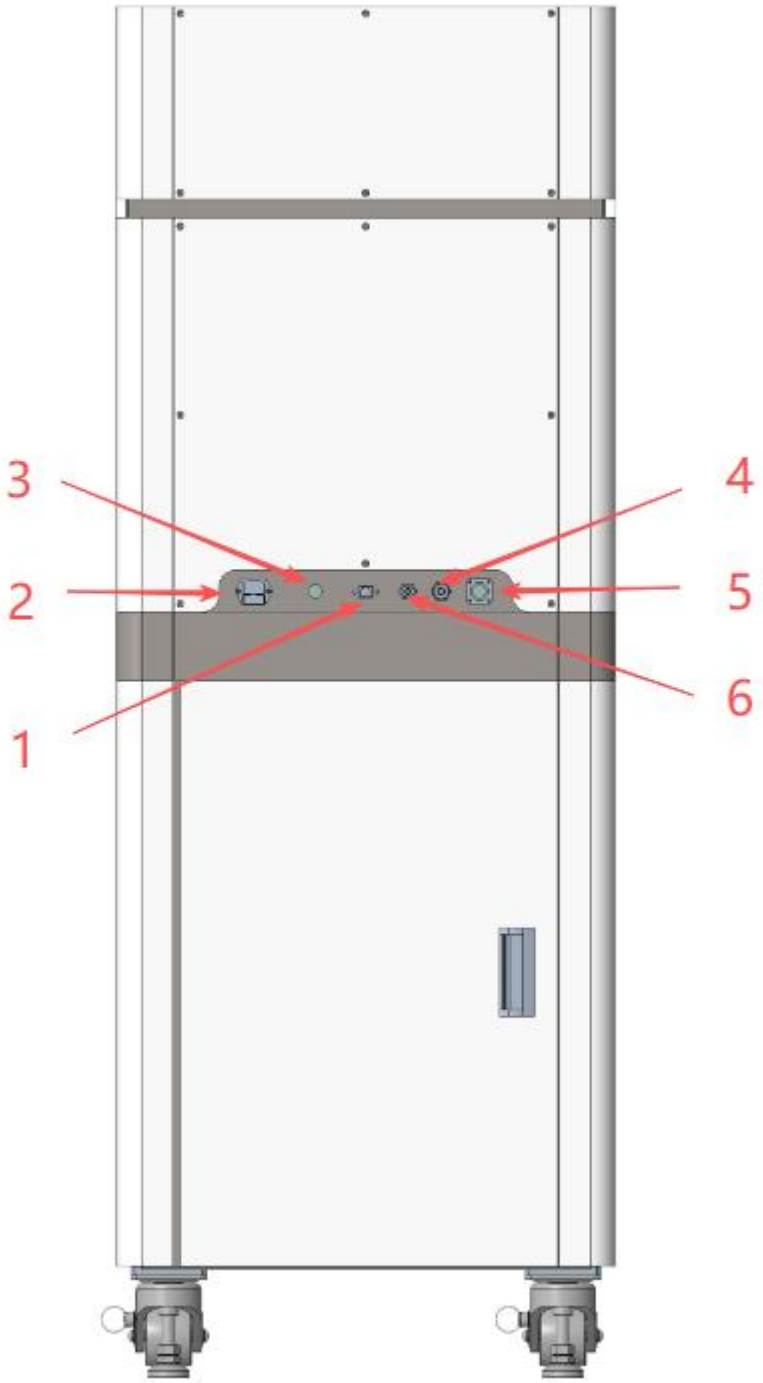

Back of the device

1. Network port 2.220V AC power supply 3.Control signal port 4.External water pipe connection 5. Hand wheel interface 6. Air hose connection

1.3 Host operation page

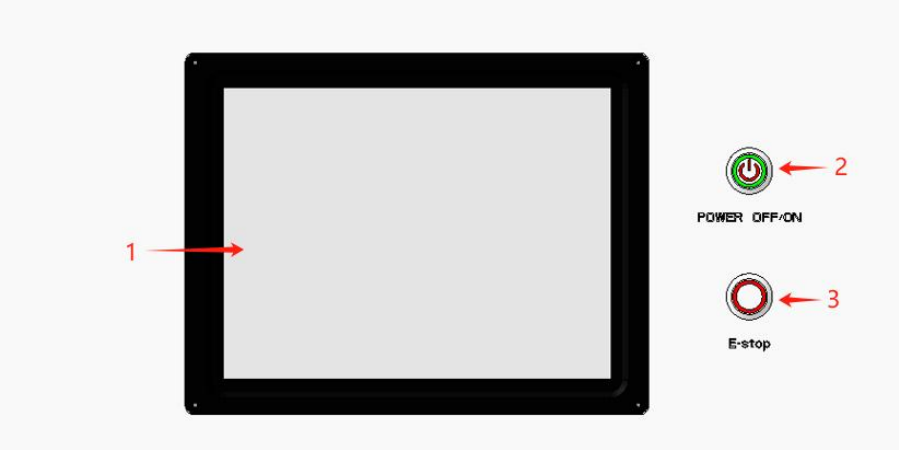

Operating Panel Diagram

1. System display 2. Power on/off button 3. System emergency stop button

1.4 Work chamber door

The work chamber door must be closed during machine operation to prevent personnel injury.

[Note]: Be careful to avoid being pinched when opening or closing the hatch.

- When opening the hatch, hold the handle and pull it outward.
- When closing the hatch, place your hand on the lower edge of the hatch and push it up.

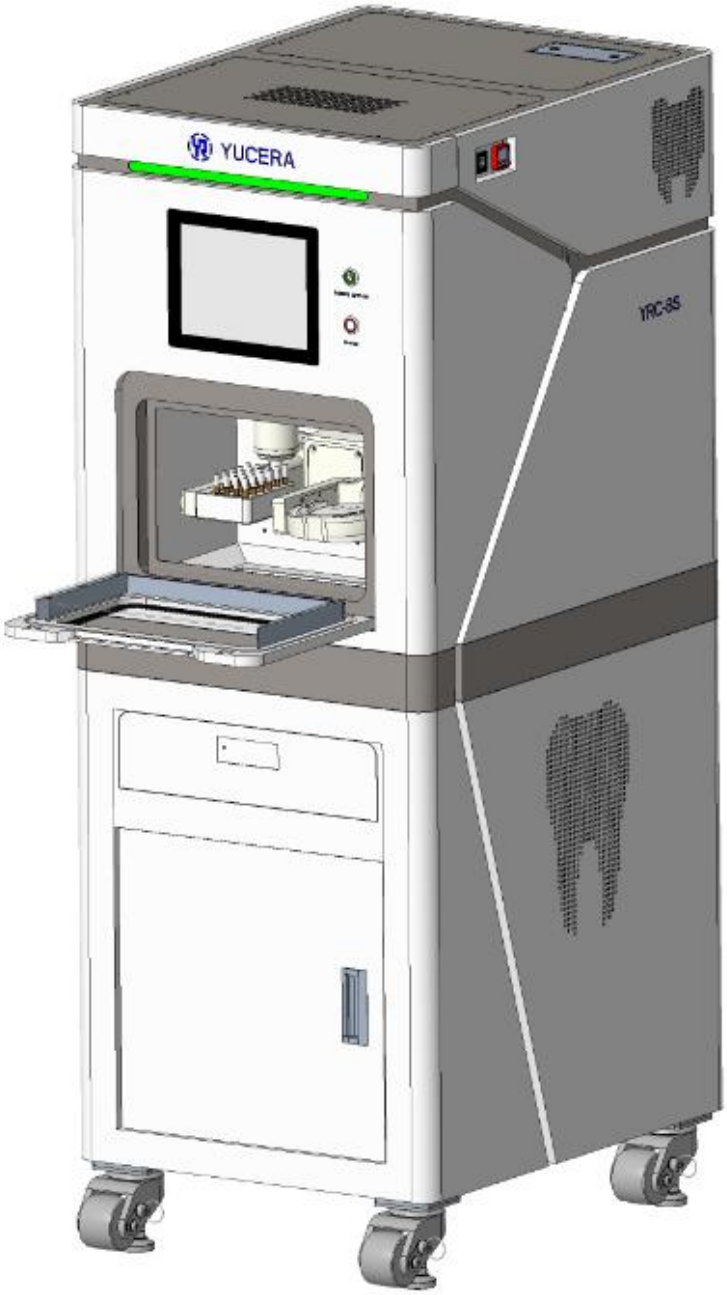

Schematic diagram of the YRC-8S opening the hatch

1.5 Work cabin

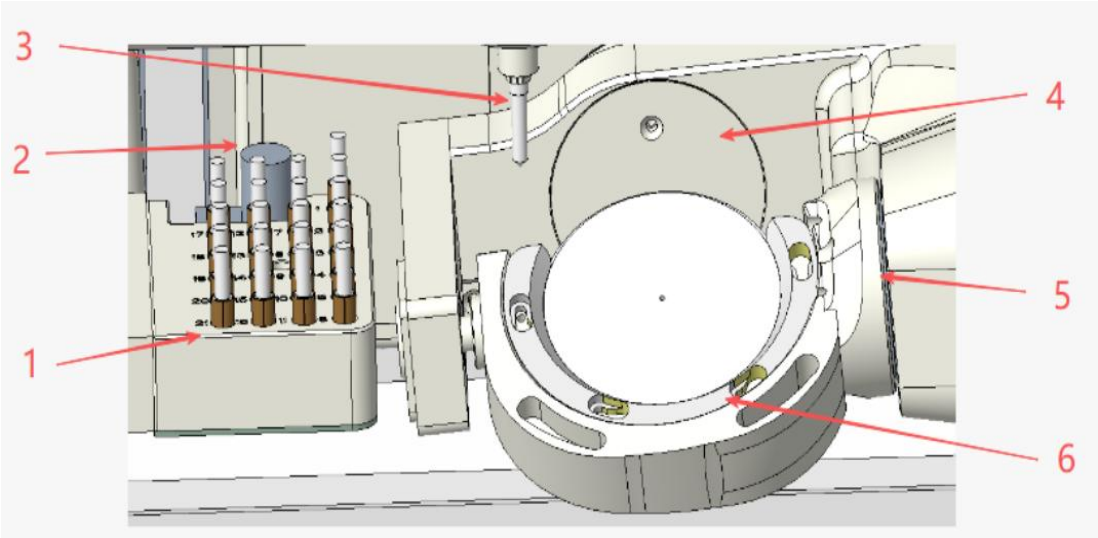

YRC-8S Work cabin diagram

1. Tool magazine 2. Tool setter 3. Spindle 4. b-axis

5. a-axist 6. Blank holder

1.6 Coolant passage

This equipment's cooling system consists of two components:

1. Gas cooling system: The gas blown out from the spindle and the jet pipe forms a gas cooling loop;

2. External milling fluid cooling system: an external milling cooling module independent of gas cooling.

During the normal operation of the equipment, the water tank will continuously inject the milling fluid into the working chamber. During the operation, the milling fluid can carry away the heat generated by the spindle tool and the blank processing in time, and then return to the water tank through the coolant circulation system to complete the cooling cycle.

Stable operation of the cooling system can effectively avoid the damage or excessive wear of sensitive parts of the equipment due to high temperature, and can reduce the rate of tool wear, prolong the service life of the tool, and ensure the machining accuracy and efficiency.

[Note]: The cooling system cannot replace regular machine cleaning. If the machine is

not cleaned regularly, its lifespan will be significantly reduced.

1.7 Technical parameter

specifications	parameter
milling method	wet milling
milling material	Cobalt-Chromium titanium discs, PMMA polymer resin, glass-ceramic, titanium pillars, etc.
Processable types	veneers, inlays, high inlays, full crowns, upper implant restoration, etc.
Trip range	X/Y/Z：230-120-100
main shaft speed	0 ~ 60000rpm/1.8KW
drive	fully servo motor
tool magazine	Quantity: 21 Shank Diameter: 6mm
size	600*760*1625mm
working accuracy	±0.01mm
pressure demand	4.5-7.5bar
Compressed air flow rate	approximately 120 liters per minute
Power	2.5KW
source	220-230V AC，50/60HZ
quality	Net weight of milling machine: 344 KG

Charpter 2 Equipment transportation and installation

2.1 Handling, Packing and Storage

⚠Warning: To ensure proper equipment operation, transport packaging must be handled by qualified operators or maintenance personnel. Please review the following handling precautions carefully.

2.1.1 Safety Guidelines for Transportation

- Before moving the equipment, the center of gravity must be clearly identified. During transportation, any shift in the center of gravity must be strictly avoided to prevent tilting or falling.
- Before moving, check the weight and orientation labels on the equipment's outer packaging to ensure it remains balanced during transportation.
- When using lifting machinery, the force part of the machinery should always be around the center of gravity of the equipment, and the equipment should be shaken as little as possible.
- When lifting or lowering equipment, keep an eye on its tilt. If possible, lower the packaging height to improve safety.
- During handling, only the designated force-bearing areas of the equipment may be used; applying force to non-designated areas is strictly prohibited.
- Equipment outsourcing materials must be removed after installation is completed. They cannot be disassembled before installation.

2.1.2 Packaging

This equipment's transport packaging is specially designed for the intended transportation method and conditions, featuring specialized protective structures to minimize physical damage and other risks during transit. The packaging must be removed before installation. When removing the packaging, ensure its integrity is maintained and keep a spare copy for reuse when the equipment needs to be returned to the factory.

2.1.3 The label is on the outer packaging.

The equipment is a high-precision instrument with many vulnerable parts inside, so handle it gently during transportation.

The interior contains numerous electronic components and water-resistant mechanical parts, so avoid moisture exposure.

When temporarily placing or storing equipment, place it in the direction of the arrow.

Do not let the packing box be tilted or rolled during transportation and handling.

2.2 Accessories

First, check the delivery list to ensure completeness. Open the machine packaging and count the following items:

order number	name of a part	specifications	unit	quantity
1	YRC-8S	600*760*1625mm	cover	1
2	hand wheel		individual	1
3	funnel		individual	1
4	power line	US/UK	twig	1
5	bolt driver	Cross, Single	individual	2
6	tee coupling	T-3-way/Y-3-way	individual	2
7	inner hexagon spanner	1-10	cover	1
8	air tube	φ8-5m	twig	1
9	cake wax	98*14MM	individual	1
10	A/B belt		twig	2
11	dowel	5MM	individual	4
12	screw	M4*12/M5*16/M5*10	crystal	20
13	cleaning brush		grasp	2

Order number	name of a part	specifications	unit	quantity
14	cleaning brush		grasp	1
15	spindle wrench	9MM	individual	1
16	Main shaft cooling and rust-proof oil		bottle	1
17	PTFE TAPE		roll up	1
18	water pipe clamp	Large/Small	individual	2
19	Spindle detection accessories	Detection probe, probe wire	cover	1
20	Wireless WIFI kit	Wireless connectors, network cables	cover	1
21	milling fluid		bottle	2
22	filter paper		Pcs	5
23	Main shaft cooling black water pump host		individual	1
24	Glass-ceramic titanium column special fixture		individual	1
25	titanium plate	98*16MM	individual	1
26	bit		cover	1
27	U tray		individual	1
28	Main spindle cooling water tank		individual	1
29	milling fluid tank		individual	1
30	titanium column		individual	2
31	glass ceramics		individual	3
32	bumper wire		individual	2
33	suction pump		individual	1

2.3 Installation conditions

- The installation site must have sufficient load-bearing capacity (approximately 344 KG) and a solid, flat surface.
- The indoor temperature should be maintained between 18℃ and 25℃ (the ideal range), with a maximum of 32℃.
- Set the installation location in a dust-free environment.
- The relative humidity of the air must be below 80%
- The power supply must provide 220-240 V AC at 50/60 Hz.

- Compression requires compressed air that meets the equipment requirements, with a pressure range of 4.5-7.5bar
- Ensure sufficient operational space around the equipment installation, with specific dimensions shown in the attached diagram.

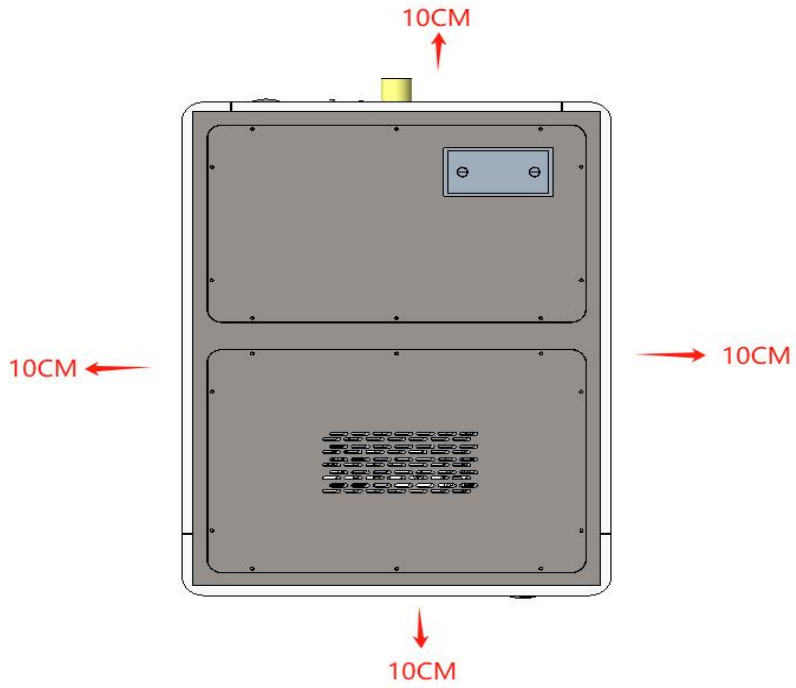

[Note]: Connect the device's power cord to a dedicated circuit with a fuse, or ensure no other devices share this power supply to prevent voltage fluctuations. Severe voltage fluctuations may interfere with the device's control system and cause system failures.

2.4 Equipment Installation

The device connection is shown in the figure:

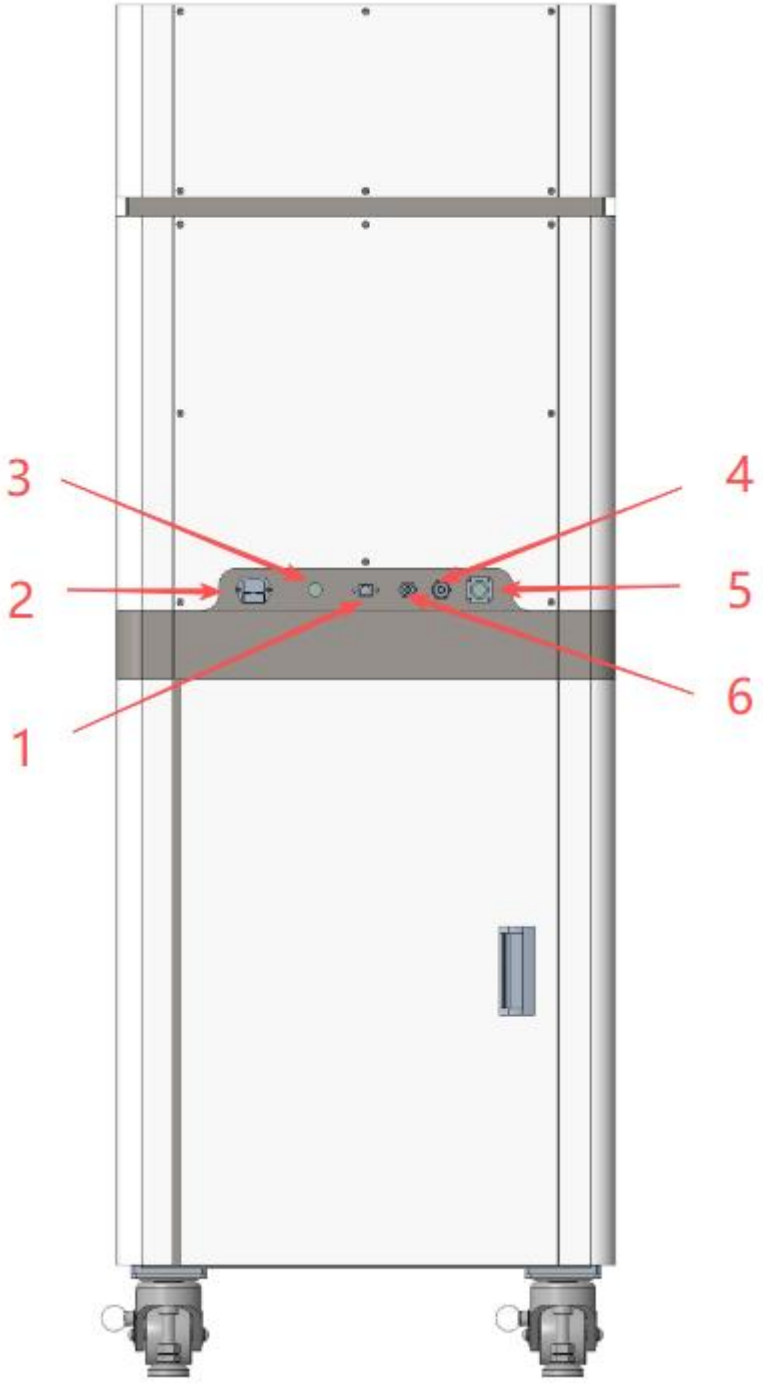

Back of the device

1.Network port 2.220V AC power supply 3.Control signal port 4.External water pipe connection 5. Hand wheel interface 6. Air hose connection

2.5 Removal and disposal of work chamber fillers

Before the equipment is first started, the transport filler in the working chamber must be removed. This filler protects the spindle and machine tool structure during transportation, preventing damage from vibrations or impacts. The specific operational requirements are as follows:

1. Open the equipment work chamber and remove all internal transport fillers completely;
2. Clean the interior of the work cabin to ensure no debris or filler remains;
3. Store the removed filler properly for reuse when the equipment needs to be transported (e.g., returned to the factory or relocated).

2.6 Pneumatic unit mounting device

1、 Installation and maintenance guidelines: During equipment installation and maintenance, ensure no compressed air flows through the pressure regulator filter.

2、 Pneumatic hose installation inspection: After installation but before inflation, ensure the hose is securely inserted into the connector and is undamaged.

3、 Compressed air connection specification: The machine must be connected to the compressed air supply source exclusively through the pressure regulator and filter provided with the equipment.

[Note]: The compressed air supplied to the input device must be oil-free and dry. Contaminated compressed air (e.g., moisture or oil) may damage the spindle and electrical components.

2.6.1 Introduction to pressure regulating filter

Compressed air is connected to the machine through a pressure regulator and filter, which can be used to regulate the pressure input to the machine and separate moisture from the gas.

Pressure regulating filter diagram

2.7 Install a water circulation filtration system.

2.7.1 Requirements for the filtration tank

Only water filters with the following features can be used:

- Tailored for dental applications, it meets the water requirements and operational needs of dental equipment.
- It can effectively intercept the tiny particles produced during processing, ensuring the cleanliness of the circulating water.
- It can adapt to the working environment of machine tools, and has no compatibility problems with temperature, humidity and space layout.
- Ensure proper installation of protective devices to prevent operator injuries during operation and maintenance.
- The maximum displacement must reach 1000ml/h to meet the equipment's water circulation requirements and ensure effective cooling and flushing functions.

2.7.2 Installation of circulating filtration water tank

Before installation, read the device installation instructions carefully. The steps are as follows:

1. Compatibility check: Verify that the circulating filter tank matches the bellows. Replace with compatible piping if mismatched. Never force use of incompatible materials.

2. bellows joint ：

- Insert one end firmly into the water tank inlet, ensuring proper depth and a tight seal to prevent leaks.
- Securely connect the other end to the machine's water outlet and verify the connection's reliability.

3. Electrical and water connections:

- Insert the water pump's power plug into the machine tool's designated power socket, ensuring proper wiring to prevent short circuits.
- The water inlet pipe is properly connected with the water inlet of the machine tool to ensure the waterway is unobstructed, the seal is good and the leakage is prevented.

2.8 Installation of Spindle Cooling Water Circulation and Filtration System.

2.8.1 Water-cooled machine requirements

- Specifically designed for equipment spindle cooling scenarios, it meets the special requirements of water flow and pressure in spindle cooling systems.
- With efficient coolant circulation and heat dissipation, it continuously supplies the spindle with stable, low-temperature coolant, ensuring optimal operating temperature.
- The system is equipped with comprehensive safety protection devices to prevent potential hazards during operation monitoring, maintenance, and other procedures on the cooling water tank.
- The water tank capacity must meet the continuous water demand for spindle cooling, and the maximum supply should guarantee the normal circulation of the cooling system to ensure effective cooling.

2.8.2 Installation of water-cooled machines

Before installation, read the equipment installation manual carefully and follow the steps. The specific operation is as follows:

1. Pre-installation preparation:

- Ensure the device is powered off to avoid safety risks during installation.
- Inspect the water tank for damage or deformation, and ensure the water inlet and outlet are unobstructed and undamaged to guarantee its proper functioning.
- Based on the equipment structure and reserved installation position, place it in a

stable position to prevent the water tank from shifting or tilting due to operational vibrations.

2. Connection between cooling pipeline and circuit:

- Select water pipes with appropriate length and matching inner diameter to the equipment's spindle cold-cut interface, ensuring the inner diameter of the pipes fits snugly without any looseness or tightness.
- Insert a water pipe with one end directly into the water outlet of the water-cooled tank, ensuring it is securely fastened without any looseness. The other end should be inserted into the coolant inlet of the equipment's main shaft, and gently push it to confirm proper positioning.
- Take another water pipe, insert one end directly into the main shaft coolant outlet and the other into the water cooler inlet. After insertion, gently pull to check stability and ensure a complete circulation loop is formed.
- Connect the 220V power cord to the water cooler's power port and the signal cable to its signal port. Ensure all connections are secure to prevent loose or detached wires.

Charpter 3 Device operation

3.1 Pre-Run preparation

Before starting the device, complete the following checks to ensure it meets the operating conditions:

1. Ensure the equipment is placed on a flat and stable surface to prevent vibration or shaking.
2. Check that all parts are properly installed and all connections are functioning normally;
3. Ensure all parts and accessories are securely fastened without any looseness or displacement.
4. Confirm all control systems are installed and can operate normally after power-on testing.

3.2 Power on the device

1. All equipment has been fully installed with sufficient compressed air supply, and the work chamber door remains closed. Note that the door must stay closed during startup and operation.

2. Press the power button on the host control panel to turn on the device.

3. The device automatically resets to its original position. After the control system is fully activated, the device will enter the automatic reset program. Subsequent operations can only be performed after the reset action is completed and the display reminder window is closed. Do not operate the device before resetting to the origin.

3.3 Device testing

After the first installation or reinstallation after transportation, test the basic performance of the equipment as follows:

1. Insert the needle into the device;

2. Do not load the material tray. Load any program and run the device.

3. Monitor the equipment's operational status and verify the proper functioning of functions including gear shifting, air blowing, and shaft rotation.

4. Confirm the device is functioning properly. If the device fails to operate, contact the supplier immediately.

3.4 Overview of the milling process

[matters need attention]：

- Before processing, make sure to read the operation manual and safety guidelines, and familiarize yourself with the operational standards and safety requirements.
- Before operation, thoroughly inspect the needle and material tray for damage. Any damage may cause part defects and equipment failure during processing.
- The NC program for the equipment, generated by CAM software like HyperDENT through layout and calculation, contains all machining parameters and instructions. It can be transmitted to the equipment's operating system via USB interface or network communication.

YRC-8S processing steps:

1. Open the layout software, select the required material block size and type based on processing needs, then complete the layout.

2. Insert the adapter needle into the designated position of the device as specified by the installation requirements.

3. Position the work piece tray on the equipment's tray mounting station, ensuring it is securely clamped without any looseness.

4. Click the "Load" button on the device interface, then select the required machining program from the program list.

5. After confirming the correct procedure selection, click the 'Start' button to initiate the device's processing operation.

3.5 Insertion and replacement of the wheel hub

- Use the correct adapter needle; mismatched model specifications may damage the spindle chuck or tool magazine.
- The handle of the lathe needle knife should be chamfered with sufficient dimensions, otherwise the chuck will be damaged.
- Do not use a needle with a blade diameter exceeding the handle diameter (φ6mm).

You can insert the 16 supplied burs into the tool magazine as shown in the figure.The device can automatically change burs during machining.

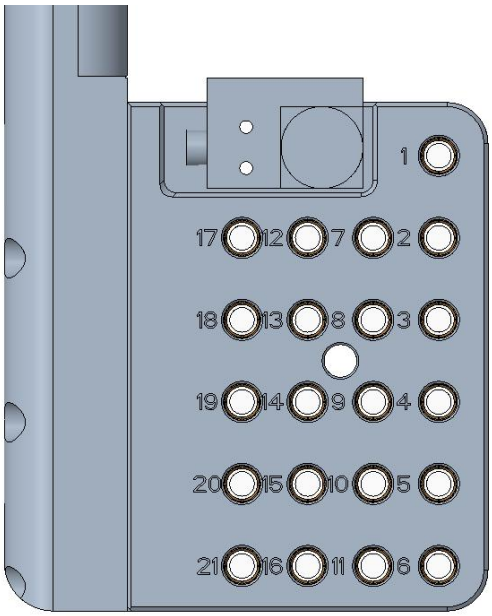

Tool center diagram

You can install the needle in two ways:

- Insert the needle into the tool magazine manually.

① Set the spindle to the safe position, then proceed to the second page of the operating system. Hold the center of the spindle's needle with your hand and click' Release Tool' to remove it.

② Insert the new needle into the spindle. Ensure the needle's fixing copper ring (as shown) is tightly secured against the spindle chuck. Then press the' Release Clamping Tool' button to secure the needle.

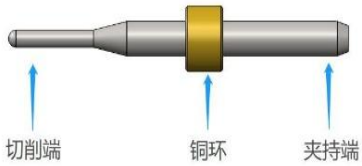

wheel diagram

③ Press the "Align" button to measure the length of the new blade and automatically record it in the system.

[Note]: After each tool release, always check the blade length regardless of needle replacement. Failure to do so may damage work pieces or even cause blade breakage.

- Through the spindle.

① Move all axes to default positions to ensure the fixture is free of material blocks and the spindle chuck is clear of lathes. If lathes are detected in the chuck, navigate to the second page of the operating system and click 'T0' to automatically return the lathes to the tool holder.

② Remove the old needle one by one in the tool holder.

③ Insert the new pins into the corresponding tool holders in sequence, ensuring the positioning copper rings are fully embedded to prevent improper installation.

④ Check the needle placement sequence and position of the new needle to ensure proper functioning of the automatic needle replacement feature.

[Caution]:

- Avoid direct impact when installing the needle to prevent damage that may affect machining accuracy or cause equipment failure.
- If the lathe needle runs beyond the preset time or if the workpiece damage is suspected to be caused by the lathe needle, it should be replaced promptly.
- The tool library is prioritized for tool change, except when the spindle tool is damaged and length measurement is impossible.
- The needle must be placed into the designated holder according to the preset specifications. Misplacement or mixing is strictly prohibited.

- Only the personnel who are familiar with the equipment and software can replace the needle after training.
- The operating system displays the default tool number. If all tool pins are properly returned to the tool library, the tool number will show as '0', as shown in the figure.

Tool Number Display

- The system checks the length of the needle before and after each extraction or reinsertion. The length deviation must not exceed the preset range. If the needle is not detected or the deviation exceeds the range, the system will display the following message.

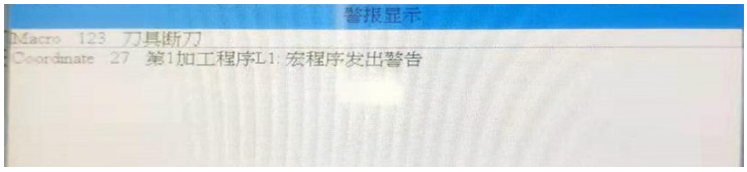

tool break diagram

- If the tool error message appears during processing, check the lathe needle or replace it and restart the program.

3.6 Car needle information

Bit size	specifications	Bit size	specifications
T01	D3.0	T09	D1.5R0.2
T02	D2.0	T10	D1.5
T03	D1.5	T11	D2.0
T04	D1.0	T12	D1.0
T05	D1.5R0.1	T13	D1.5
T06	D1.5R0.2	T14	D2.0
T07	D2.0R0.2	T15	D2.0R0.2
T08	D0.5	T16	D1.0

3.7 Install and disassemble the tray

The YRC-8S fixture is an open-type design, with the raw material mounting fixture (as

shown in the figure) installed.

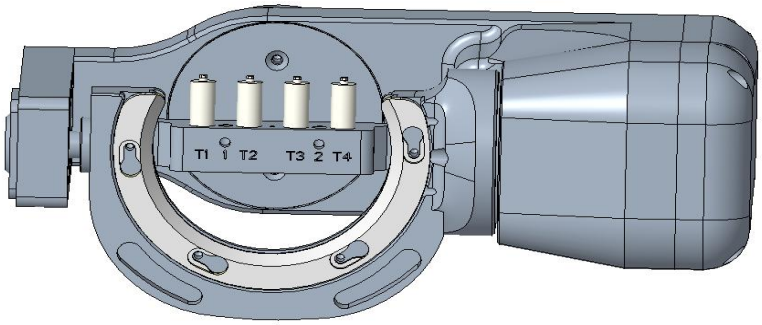

Titanium column fixture diagram

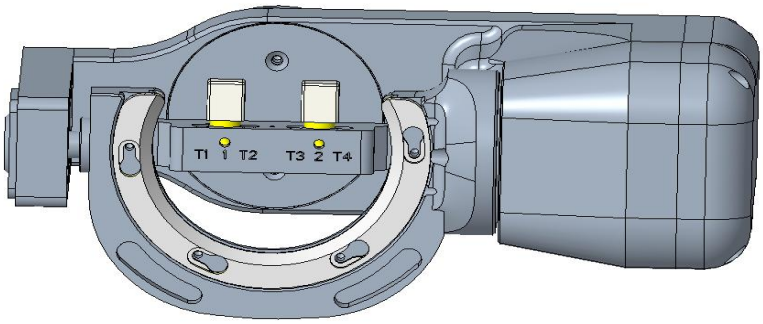

Glass-ceramic fixture diagram

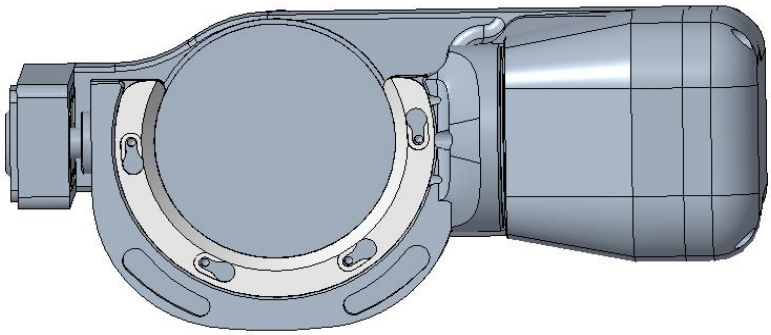

Titanium plate fixture diagram

3.7.1 Load tray

Secure the glass-ceramic/titanium column with a fixture, as shown in the figure.

(1) Open the work chamber door and clean the fixture groove thoroughly;

(2) Use a screwdriver to loosen the screws on the fixture;

Place the raw material into the fixture and tighten the fixing screws with a screwdriver, as shown in the figure.

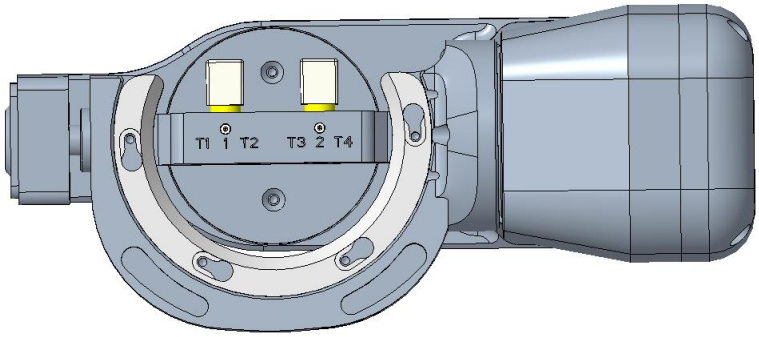

Fixed tray diagram

[Note]: Ensure all screws are securely tightened. Any movement or vibration of the material tray during milling may cause equipment damage.

3.7.2 Remove tray

To remove the part, simply loosen the fixing screw and pull it out.

3.8 Program interrupt and stop

[Note]: When the program is interrupted or stopped, the operating system page will display a corresponding alert window to indicate the exception.

If the device's air pressure is insufficient, the program will pause automatically. When the pressure returns to the normal range, the program will restart and continue.

You must manually cancel the current program when the following conditions occur:

- When the device fails;
- When the tool is damaged;
- During a sudden power outage;
- When the milling fluid supply is abnormal.

If the program is canceled, restart the program in the device system to resume operation.

3.8.1 Interrupt handling method

If an interrupt occurs during program execution, the operating system page displays the

corresponding information.

The device shows insufficient air pressure. Check the following:

- Check whether the pressure values on the pressure-adjusted filter element and the barometer are within the correct range.
- whether there is air leakage in the trachea;
- Check if the air compressor is working properly.

3.8.2 Methods for handling equipment failures

When a device failure is triggered by an emergency, the control unit issues corresponding commands, and the operating system interface displays the fault-related error message and error code for the operator to identify.

If the alarm cannot be resolved through standard troubleshooting, immediately document all alarm details (including error codes and fault symptoms) and contact the manufacturer's after-sales service for professional assistance.

3.8.3 Methods for dealing with damaged milling tools

When the tool breaks during processing, the equipment cannot detect it immediately, and the spindle will continue rotating and milling until the next lathe needle is replaced. Only during the lathe needle length measurement, if the length is abnormal, the program will report an error, and the error message will be displayed on the operating system interface.

Common causes of breakage:

- The wheel itself is damaged or excessively worn;
- The material selected for layout does not match the material actually processed
- The lathe needle is incorrectly positioned or manually inserted into the spindle at an improper time, making it unsuitable for the current machining step. Therefore, the lathe needle must be replaced. The steps are as follows:

①Open the working hatch of the equipment;

②Remove the broken needle from the work chamber;

③If the lathe needle is retrieved from the tool magazine by the spindle, first verify the correct placement of the needle in the tool magazine. After confirmation, insert the new compatible lathe needle into the designated position.

④ If the needle is manually loaded onto the spindle, verify that the damaged needle matches the designated needle displayed on the operating system interface, then prepare and load the new correct needle.

⑤ Close the work compartment door and restart the programme.

Charpter 4 Operating System Page

4.1 Main interface introduction

The main interface is the core operation display interface of the device, used to implement various processing operations and status monitoring. Through this interface, you can complete processing data output, real-time display of processing status, fault alarms, and other information. After the device starts up, it automatically enters the following main interface.

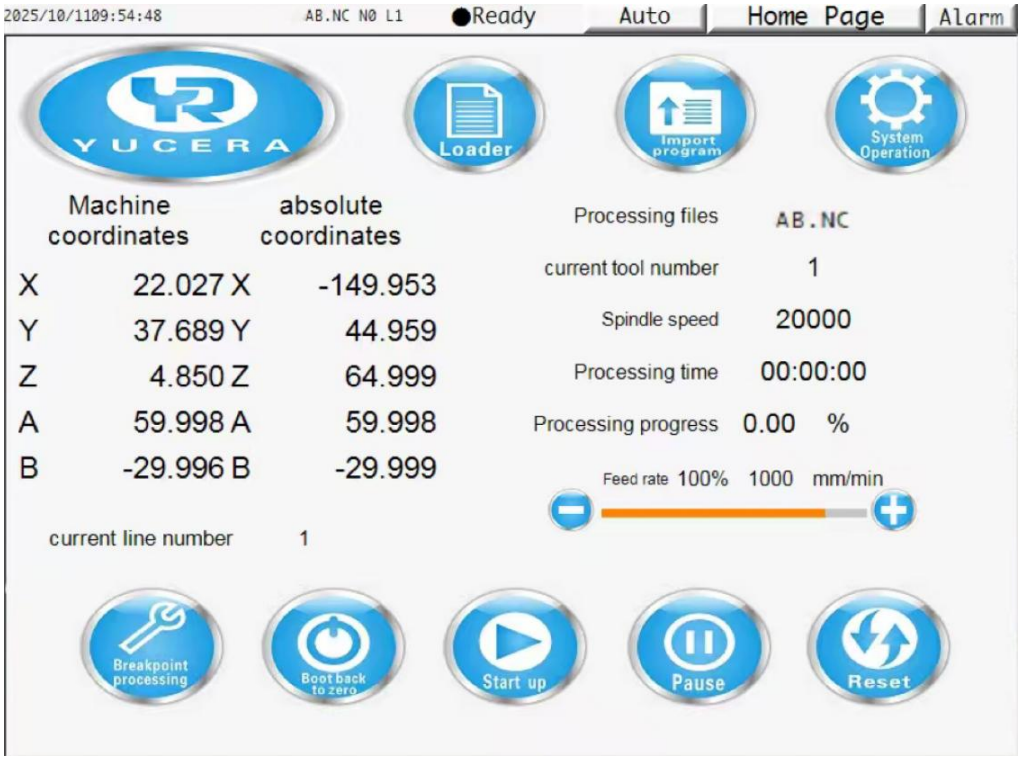

Home page image

4.1.1 Function description of the Main Page

※Loader: Click the "Loader" button on the screen to select a machining programme. All programmes within the system can be opened for use, with the default format being NC documents.

※Import program: When copying programmes via USB, click the "Import programme" button and select the required programme from the left-hand list in the pop-up window.

※System Operation: Clicking this button automatically navigates the system to the second auxiliary page.

※ Break Point Processing: Resumes machining after the program is interrupted due to an abnormal condition.

※ Boot to Zero: Press this button to initiate the homing sequence for all axes of the device.

※ Start Up: Runs the currently loaded program.

※ Pause: Pauses the device during machining.

※ Reset: Resets the current device status (machining or alarm mode), typically used to clear alarm states.

- Axis Coordinate Information Display

	Machine coordinates		absolute coordinates
X	22.027	X	-149.953
Y	37.689	Y	44.959
Z	4.850	Z	64.999
A	59.998	A	59.998
B	-29.996	B	-29.999

- Status Display Description

Displays the current feed rate, spindle speed, machining progress, file processing time, current tool number, and current line number.

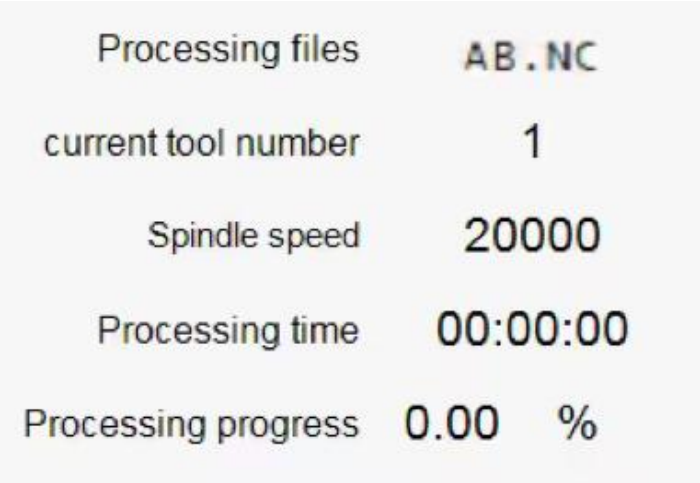

- Process Display

Feed rate progress bar control. This progress bar enables adjustment of machining speed (increase or decrease).

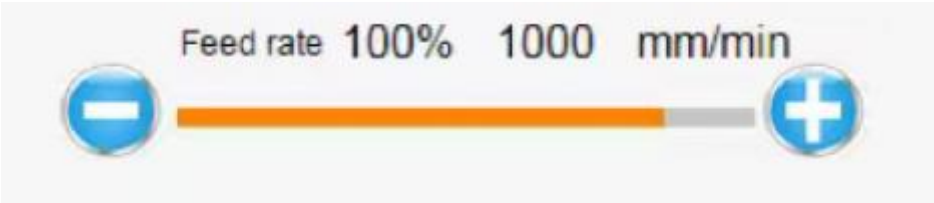

- Machining status display

Status	Colour
Processing	Green
Alarm	Red
Processing complete	Green & Red Alternating
Idle Status	Blue

4.2 Set interface description

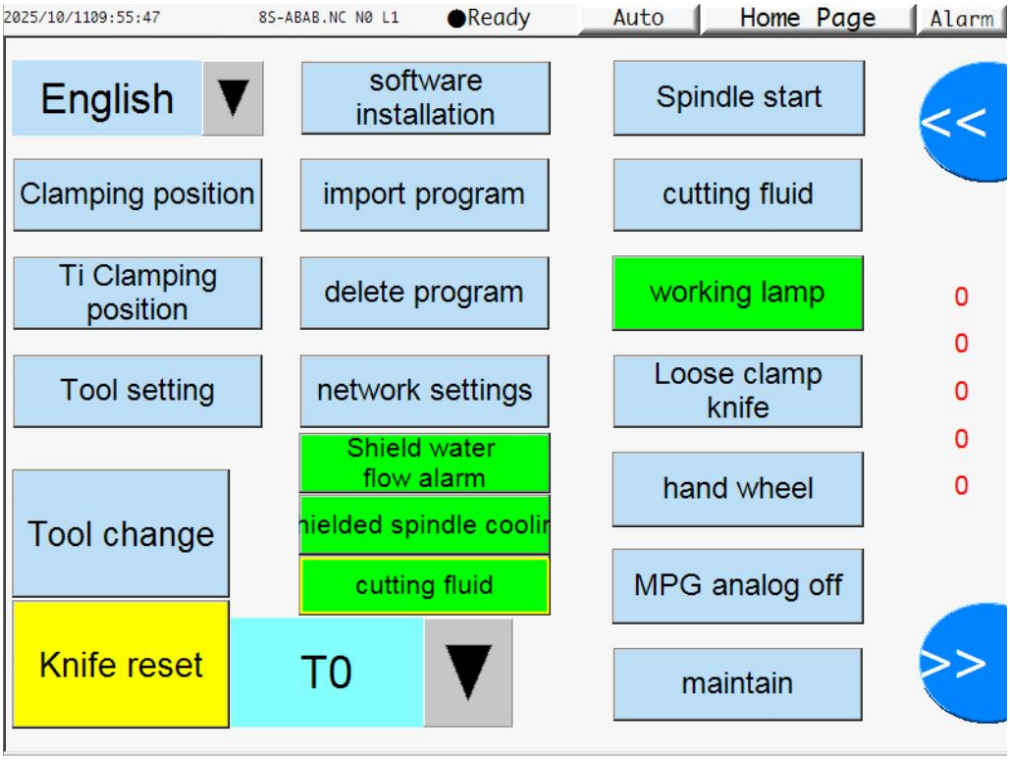

Set interface diagram

- Clamping position

When clamping the work piece, click 'Clamping position' to position the machine's axes for secure clamping.

- Ti Clamping position

When installing the titanium column, click 'Ti Clamping position' to position the machine axes for secure installation.

- Tool setting

Click the 'Tool setting' button to measure the tool length of the current lathe needle and record it in the system.

- Tool change

Click the "Tool change" button to manually switch the tool. The tool alignment will be automatically completed after the switch.

- Knife reset

Click the "Knife reset" button to automatically reset the current system knife number to 0.

- Software installation

The function of this button is mainly used for system software upgrade.

- Delete program

When too many system program files need to be deleted, click the "Delete program" button and select the files in the pop-up window.

- Network settings

When the device connects to the network, go to the Network Settings interface and manually configure the correct IP address and gateway to enable nc file transfer over the network.

- Spindle start

Manually rotate the spindle.

- milling fluid

The coolant manual switch will trigger an alarm if disconnected or if the water flow is insufficient.

- Working lamp

It is used for lighting the working area of the equipment.

- Loose clamp knife

When the needle malfunctions or requires replacement, click 'Loose clamp knife' to open the spindle chuck and remove the needle. After inserting the new needle correctly, click to close the spindle chuck.

Note: Before reinserting or replacing the tool needle, always click 'Tool setting' to check the current tool length.

- Hand wheel

Click this button to manually adjust the position of each axis.

- Maintain

Click "Maintain" to display the device's system serial number and expiration date.

- < <

Go back to the previous screen.

- > >

After clicking the '>>' button in the system interface, a password-verified auxiliary page will appear. You can enter this page to store and retrieve coordinates, modify external offset parameters, and view real-time coordinate information and the current tool position.

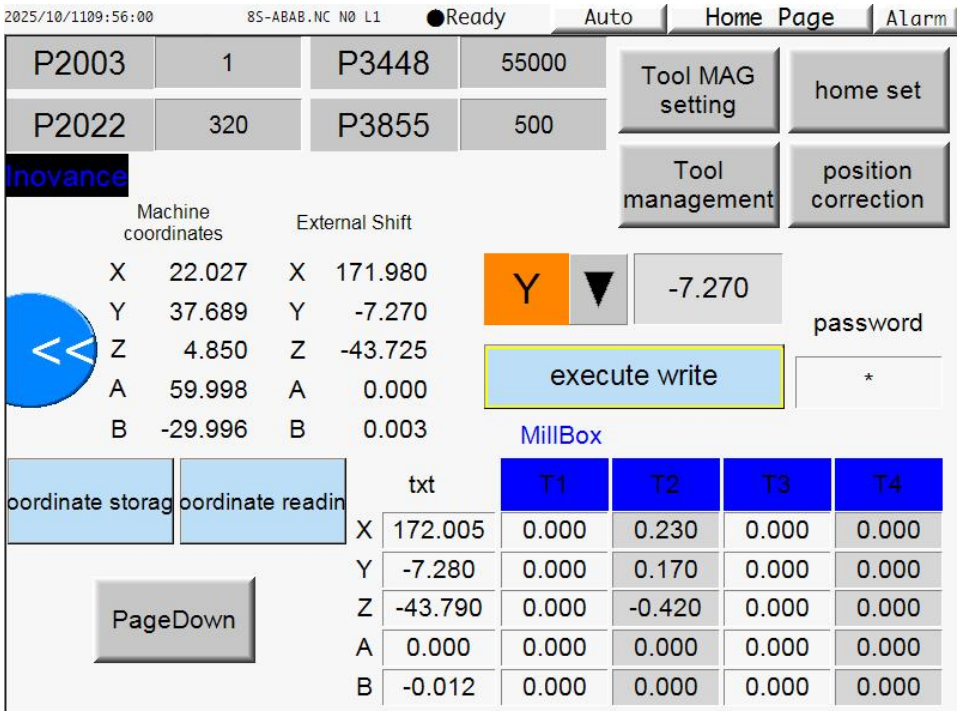

- Coordinate Storage & Recall

Save the current device's set coordinates, or retrieve previously saved coordinates when the device moves.

- Execute write

Select the axis to modify, enter the coordinate value, and click to overwrite the original coordinates

- Coordinate Display Area

Display the current mechanical coordinates and the set offset coordinates.

- TOOI MAG setting

Click to open the tool holder coordinate setting interface.

- Home set

Switch to absolute and incremental values, which can be used when the origin switch is damaged.

- Tool management

Displays the current tool life and maximum tool life.

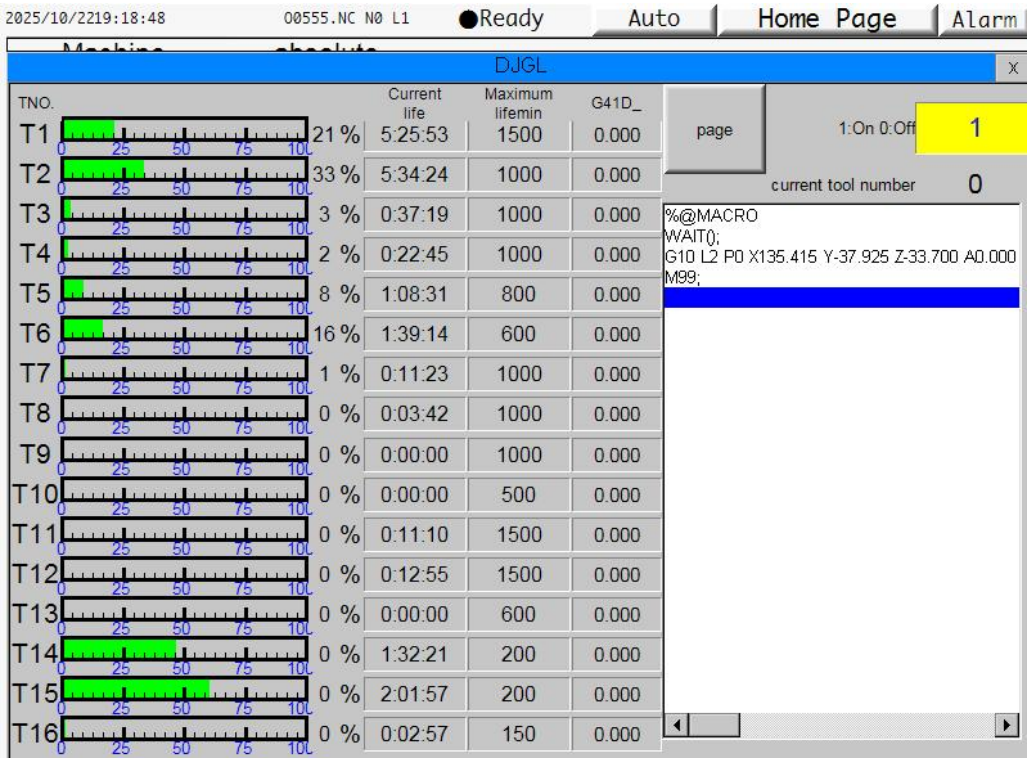

- Position correction

Whether the calibration of each axis position with automatic probe has changed.

Charpter 5 Equipment maintenance and cleaning

5.1 Safety Notice!

To ensure stable processing accuracy and extend the service life of the equipment, we recommend regular maintenance and care. Before maintenance, make sure all axes are adjusted to a safe position, and turn off the power and unplug the power cord to ensure safe operation.

⚠ Warning: After powering off the device, residual electricity may remain in internal components. To avoid electric shock, wait several minutes after power-off until all components are fully discharged before performing maintenance.

⚠ Note: When cleaning the equipment, use a damp cloth. For better cleaning results, choose a suitable cleaner. Do not use abrasive cleaners to avoid scratching the equipment surface, or cleaners containing corrosive components for rubber parts to prevent aging and damage to seals, hoses, and other components.

All maintenance and related operations must be performed by professionally trained and certified personnel. Unauthorized operation is strictly prohibited. Before inspecting the equipment's pneumatic system, the main switch must be turned off, and the system's internal pressure and the entire air duct must be depressurized to atmospheric levels to prevent high-pressure gas release and potential safety hazards.

5.2 Accessories replacement warning!

Using non-manufactured or unsuitable parts may pose risks to operators and could result in equipment damage or complete failure. Therefore, only original manufacturer parts or manufacturer-authorized parts are permitted.

For questions, contact the manufacturer's customer service.

5.3 Regular cleaning

5.3.1 Cleaning requirements for equipment and parts

1. Daily cleaning can extend the service life of individual components and prevent malfunctions caused by debris.

2. Regular cleaning can extend the service life of the equipment.

3. For cleaning plastic components, use a suitable liquid cleaner to ensure the process does not damage the plastic surface or material properties.

4. To prevent dust or impurities from entering the core components and causing malfunctions or damage, do not use a gas gun to clean the equipment's interior.

5. When installing materials, ensure the fixture and screws are clean to achieve optimal clamping performance.

6. The tool magazine and tool setter must be free of chips and debris to ensure accurate length measurement and tool replacement. If any damage is found, contact the manufacturer immediately for replacement.

5.3.2 Clean the spindle chuck

Avoid spraying oily mist or compressed air with oil-water mixture directly onto the spindle head, as this may allow contaminants to infiltrate the spindle bearing, potentially impairing its rotational performance or causing bearing damage.

The spindle chuck and the inserted lathe needle must be kept clean, if impurities enter the spindle, it will increase the resistance of the spindle rotation, and affect the rotation concentricity.

The spindle chuck should be cleaned weekly under normal conditions. If the lathe needle is damaged due to impact, the spindle chuck must also be cleaned simultaneously.

Note: Always use the dedicated tool to handle the spindle chuck, as shown in the figure.

Spindle Collet Hex Key Diagram

⚠ Warning: Do not close the spindle chuck when it is not loaded. Rotating the spindle

without a chuck may cause damage. Ensure the chuck always has a lathe needle.

Clean the spindle chuck:

a. Reset the device to a safe position;

b. Confirm that the spindle has stopped rotating;

c. Use a specialized tool to remove the spindle chuck;

d. Clean the hole for the chuck to be placed on the spindle;

e. Clean the chuck with a small brush to ensure there are no residual impurities on its surface.

d. Reinstall the cleaned chuck onto the spindle, ensuring it is securely tightened.

5.3.3 Check the hose, cable, and connections.

i. First, power off the equipment and cut off the compressed air supply before conducting the inspection.

ii. Check the hose and cable connections to ensure they are properly secured; also verify that all connections on the connection plate are tight and not loose.

iii. If the hose or cable is damaged, do not restart the device. Immediately replace the damaged component with a spare part.

iv. If cables or hoses are loose, reinsert them into the corresponding connection points. If the connection is damaged, immediately stop using the equipment and contact after-sales service for assistance.

5.3.4 Check the pressure regulating filter.

Regular inspection: The air source dryer should undergo a comprehensive monthly inspection. As it typically contains integrated filter components, any impurities affecting its performance during inspection must be removed to ensure proper functioning of the filters.

Disassembly and cleaning: The dryer must be disassembled from the equipment annually for thorough cleaning of internal components to ensure efficient operation.

Cleaning agent selection: Neutral cleaning agents should be used during cleaning. The use of corrosive substances such as chemicals, organic solvents, thread locking agents, synthetic oils, milling fluids, salts, or alkalis is strictly prohibited. These corrosive substances may cause rusting of dryer components or damage to rubber and resin parts, thereby affecting

their normal operation.

[Note]: If the air source dryer becomes contaminated, it may cause equipment damage. Regular inspection and maintenance should be performed as required.

5.4 Guide maintenance

Regular maintenance of the screw and guide rail helps maintain machining accuracy and prolong equipment lifespan. The procedure is as follows:

①Turn off the device power.

②Remove the screws connecting the device's side cover and rear cover, then detach the rear cover as shown in the diagram.

③Use a vacuum cleaner to remove debris from inside the equipment, then wipe the dirt off the screw rod and guide rail with clean paper towels.

④Apply grease evenly to the cleaned screw rod and guide rail surfaces.

⑤Reinstall the removed cover plate. If you encounter any issues during maintenance, contact customer service immediately.

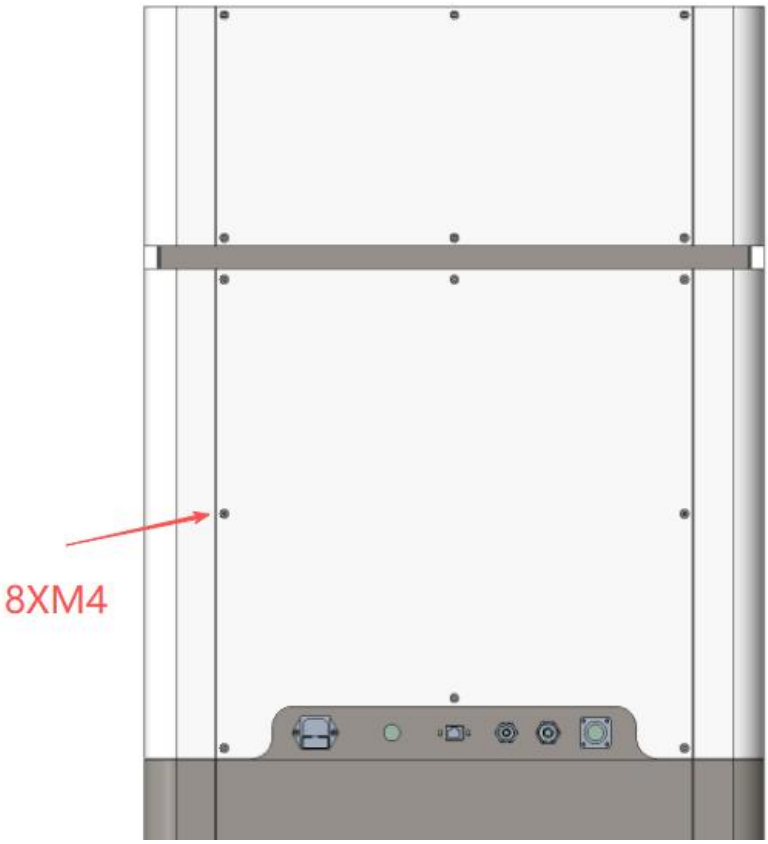

Equipment cover plate removal diagram

5.5 Cleaning of the circulating water tank

5.5.1 Cleaning of the circulating water tank

Regular cleaning of the circulating water tank helps extend the service life of the pump and related components, while improving the surface finish of processed parts. The procedure is as follows:

(1) Turn off the device power.

(2) Remove the inlet/outlet pipes; if possible, take out the water pump for cleaning as well.

(3) Remove the filter cotton from the water tank and clean it thoroughly.

(4) Clean the water level gauge and sewage pipe.

(5) Rinse the tank several times with clean water until no visible dirt remains.

(6) The filter cotton, water pump, water pipe and other parts were installed back to the original position in turn.

(7) Add water and milling fluid to the water pipe in the proportion of 1:20.

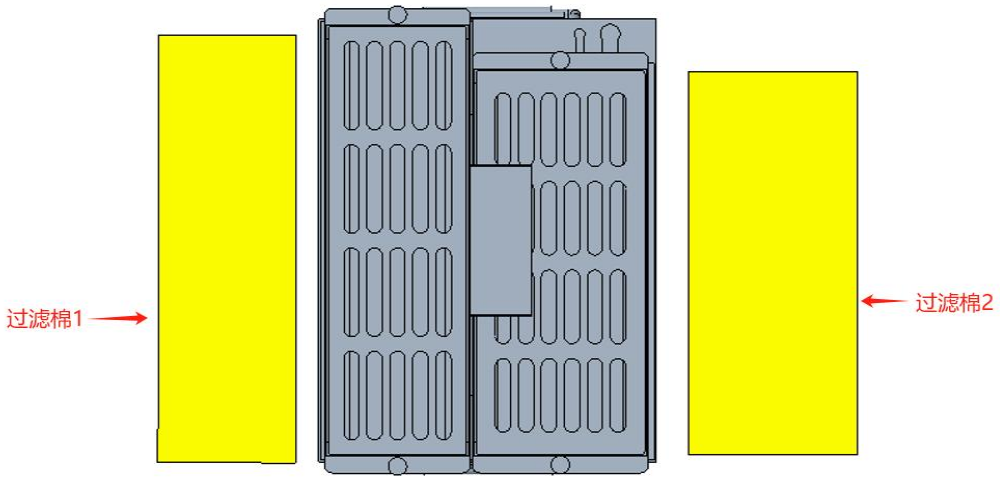

Schematic diagram of the circulating water tank

5.5.2 Maintenance of water-cooled machines

To ensure efficient and stable operation of water-cooled machines and prolong their service life, regular maintenance is required. The specific measures are as follows:

(1) Body cleaning: Clean the water-cooled machine's casing regularly (e.g., every six

months or annually) to remove dust and oil, ensuring optimal heat dissipation performance.

(2) Condenser maintenance: Perform regular cleaning to remove scale and contaminants, ensuring optimal heat exchange efficiency.

(3) Filter cleaning: Depending on water quality, regularly inspect and clean the filter (e.g., monthly) to prevent clogging and ensure proper water circulation.

(4) Dust filter maintenance: Keep the dust filters on both sides of the water-cooled unit clean, and clean them regularly with compressed air or neutral detergent.

(5) Voltage and current monitoring: Regularly check the stability of the water-cooled machine's voltage and current to ensure it operates within normal parameters.

(6) Pump and circulation system inspection: Ensure the pump operates normally, the water circulation system is leak-proof, and the water quality is clean.

(7) Cooling tower inspection: Check the operating status of the cooling tower fan and condenser, and keep the cooling tower clean.

(8) Coolant replacement: Replace the coolant every three months at most, depending on water quality.

Schematic diagram of a water-cooled machine

5.6 Maintenance Schedule

Maintenance Project	period
Clean the work chamber, tool setter, tool magazine, and needle holder.	every day
cleaning spindle chuck	weekly
pressure regulating filter	weekly
Clean the screw rod and guide rail	semiannually
accessory equipment	weekly
machine tool calibration	if necessary

5.7 Device calibration

This equipment has undergone professional calibration before leaving the factory. If the processed products meet quality standards (with no defects), no additional calibration is required.

The calibration process requires a certain amount of time, and improper operation may cause equipment failure or even irreversible damage. It must be performed with caution.

If the processing result is not as expected, the working conditions should be adjusted first, including checking whether the workpiece is fixed firmly, the wear and installation status of the turning needle, and whether the processing material meets the equipment compatibility requirements.

Before equipment calibration is required, you must contact the supplier for professional guidance. During calibration, strictly control the accuracy of reading and entering measurement data. If any operational issues arise, immediately stop the calibration process and continue only after confirming with the supplier.

Disclaimer

To ensure proper equipment operation and protect both parties' legitimate rights, as the manufacturer, we hereby inform you: Please carefully review the following disclaimer before reading and using this equipment manual. By starting or using this equipment, you acknowledge and accept all terms of this disclaimer and will comply with its provisions.

1. The operational guidelines and safety precautions outlined in this equipment manual are designed to ensure safe and standardized operation. Please read and fully understand all content, and strictly follow the specified procedures throughout your use. The manufacturer shall not be held liable for any accidents, personal injuries, or property damage resulting from non-compliance with these guidelines or procedures.

2. Usage Restrictions: The information and operational guidelines provided in this equipment manual are strictly limited to the device's intended design purpose and specified usage scenarios. Any use of the equipment in unexpected, improper, or hazardous ways is strictly prohibited. The manufacturer shall not be held liable for any losses, personal injuries, or property damage resulting from improper use of the equipment.

3. Disclaimer: All information and content in this equipment manual are provided based on existing knowledge and technology. The manufacturer has made every effort to ensure their accuracy and completeness. However, the manufacturer shall not be liable for any loss, damage, or inconvenience caused by errors, omissions, or inaccuracies in the manual.

4. Legal Compliance: Users must comply with applicable laws, regulations, and rules to ensure their equipment usage meets regulatory requirements. The manufacturer shall not be liable for any consequences arising from users' non-compliant equipment use.

5. Warranty Limitations: The warranty coverage and duration are subject to the specified warranty terms. The manufacturer shall not be liable for any issues or damages beyond the warranty scope or period. Please read and understand this disclaimer in detail before using the equipment.

If you have questions about safe operation of the device or need additional information,

please contact the manufacturer or authorized representative. By using this device, you acknowledge and agree to the terms of this disclaimer, and accept the potential risks and liabilities associated with its use.